Digital Gyro Repeater

INSTRUCTION MANUAL

LR40

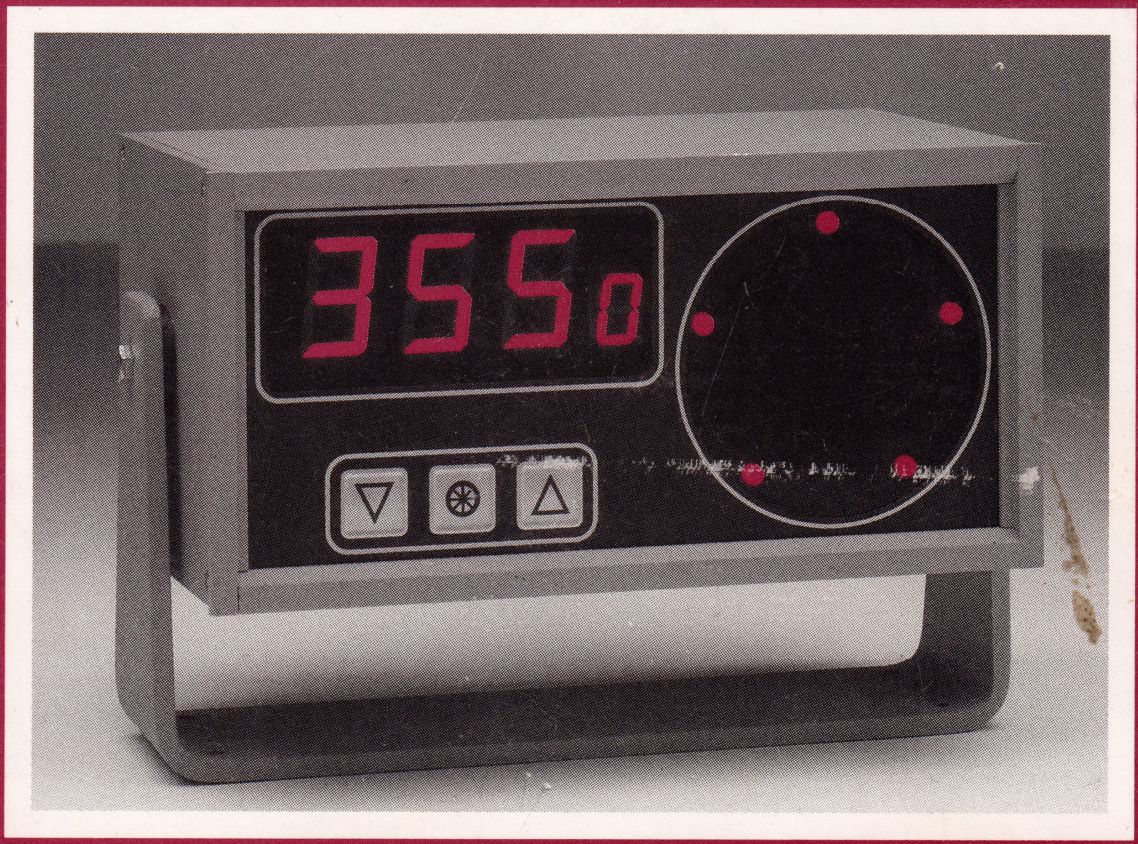

scandinavian micro systems

Digital Gyro Repeater

LR40
INSTRUCTION MANUAL

Tenth (10) Edition: August 1997
DOCUMENT PART No.. PRT_DOC_10004

Use this manual for UNITS with
SERIAL No. 45001 or HIGHER

Designed and Manufactured by:

Scandinavian Micro Systems AS
P.O. Box, N-1411 Kolbotn, Norway

Tel: +47.6680.7107, Fax: +47.6680.8095

Scandinavian Micro Systems Inc
1041 S.E. 17th Street Suite 100
Ft. Lauderdale, FL 33301, USA
Ph:+1.954.523.8878, Fax:+1.954.523.7157

TABLE of CONTENTS

1. CHAPTER ONE -- DESCRIPTION 5

1.1. GENERAL DESCRIPTION. 5
1.1.1. HEADING DISPLAY 5
1.1.2. ANALOG TURNING INDICATOR 5
1.1.3. OPERATOR CONTROL 5

1.2. VERSIONS 5

2. CHAPTER TWO - OPERATING INSTRUCTIONS 7

2.1. BRILLIANCE CONTROL 7

2.2. HEADING DISPLAY ADJUST 7

2.3. LAMP TEST 7

2.4. STATUS TEST 7

3. CHAPTER THREE -- TECHNICAL SPECIFICATION 9

3.1. GYRO INPUT 9

3.2. SERIAL DATA INPUT & OUTPUT 9
3.2.1. SERIAL DATA "SLAVE" MODE -- INPUT SOFTWARE 9
3.2.2. SERIAL DATA INPUT ALARMS 9
3.2.3. SERIAL DATA INPUT/OUTPUT DAISY-CHAINING 9
3.2.4. LR40 NMEA 0183 FORMAT 10
3.2.5. LR40 10-BIT FORMAT 11
3.2.6. LR40 10-BIT FORMAT WITHOUT ALARM-CODE 12
3.2.7. LR40 with ROBERTSON RGC11 FORMAT 13
3.2.8. LR40 with ANSCHÛTZ ST20 INTERNAL SERIAL FORMAT 14

3.3. ACCURACY 15

3.4. ELECTRICAL SPECIFICATIONS. 15
3.4.1. MAINS 15
3.4.2. POWER CONSUMPTION 15
3.4.3. GYRO INPUT SIGNALS 15
3.4.4. SERIAL DATA 16

3.5. ENVIRONMENTAL SPECIFICATIONS. 16
3.5.1. OPERATING 16
3.5.2. STORAGE 16

3.6. MECHANICAL SPECIFICATIONS 16
3.6.1. MATERIAL 16
3.6.2. DIMENSIONS 16
3.6.3. WEIGHT 16

4. CHAPTER FOUR - INSTALLATION & SETTING-UP PROCEDURES 17

4.1. MECHANICAL MOUNTING 17
4.1.1. CRADLE MOUNTING - INSTALLATION PROCEDURE. 17
4.1.2. PANEL MOUNTING - INSTALLATION PROCEDURE. 17

4.2. SETTING-UP PROCEDURE 26
4.2.1. PROGRAMMING PROCEDURE 26
4.2.2. CABLE CONNECTING PROCEDURE 26

5. CHAPTER FIVE - LR40 PROGRAMMING AND DIAGRAMS 27

5.1. PROGRAMMING OF MAINS INPUT 27

5.2. PROGRAMMING OF SERIAL SIGNAL 28

5.3. GYRO COMPASS SELECTION -- CABLING & PROGRAMMING 30

6. CHAPTER SIX - TROUBLE SHOOTING 47

6.1. ALARM CODE 020.0 = INCORRECT SIGNAL FROM MASTER REPEATER 47

6.2. ALARM CODE 040.0 = INTERNAL SOFTWARE FAULT 47

6.3. ALARM CODE 080.0 = ERRATIC SIGNAL FROM GYRO 47

6.4. ALARM CODE 100.0 = ALARM IN MASTER 47

6.5. ALARM CODE 200.0 = SERIAL SIGNAL MISSING 47

6.6. ALARM CODE 400.0 = SIGNALS FROM GYRO MISSING 48

6.7. ALARM CODE 800.0 = POWER ON ALARM / LOW LINE VOLTAGE ALARM 48

6.8. COMBINED ALARM CODES 48

7. CHAPTER SEVEN - PARTS LISTS & SCHEMATIC DIAGRAMS 49

7.1. PARTS LISTS 49
7.1.1. PARTS LIST for LR40 CABINET (AC & DC) -- V1.2 49
7.1.2. PARTS LIST for L40/LR60 DISPLAY PCB -- V1.3 51
7.1.3. PARTS LIST for LR40/LR60 COMPUTER PCB -- V1.3 51
7.1.4. PARTS LIST for LR40 INTERFACE PCB -- V1.2 52
7.1.5. PARTS LIST for LR40 CONNECTOR PCB -- V1.0 53

7.2. SCHEMATIC DIAGRAMS. 54
7.2.1. DRAWING No.: SR4193 54
7.2.2. DRAWING No.: SR4192 55
7.2.3. DRAWING No.: SR4194 56
7.2.4. DRAWING No.: SR3207 57
7.2.5. DRAWING No.: SR4156 59
7.2.6. DRAWING No.: SR4157 61
7.2.7. DRAWING No.: SR4158 63

7.3. CERTIFICATE OF GUARANTEE 65

7.4. IMPLEMENTATION OF GUARANTEE CARDS 66

LIST of FIGURES

FIGURE 3.1 - LR40 ELECTRICAL BLOCK DIAGRAM 15
FIGURE 4.1 - BULK-HEAD MOUNTING 18
FIGURE 4.2 - MOUNTING OF CRADLE -- DIMENSIONS 18
FIGURE 4.3 - PANEL MOUNTING -- CUT-OUT 19
FIGURE 4.4 - PANEL MOUNTING -- FIXING DETAILS 19
FIGURE 4.5 - PANEL MOUNTING W/ WING-KIT -- SIDE VIEW 20
FIGURE 4.6 - PANEL MOUNTING W/ WING-KIT -- FRONT VIEW 21
FIGURE 4.7 - LR40 REAR COVER -- DETAILS 22
FIGURE 4.8 - CABLE TERMINATION -- DETAILS 22
FIGURE 4.9 - CABLE CONNECTIONS -- CONNECTOR PCB 23
FIGURE 4.10 - TYPICAL CABLE PLAN 24
FIGURE 4.11 - TYPICAL SERIAL DATA CONNECTIONS 25
FIGURE 5.1 - MAINS PROGRAMMING 27
FIGURE 5.2 - PROGRAMMING OF SERIAL DATA BAUD RATE 28
FIGURE 5.3 - SELECTING RS422 OR RS232 28
FIGURE 5.4 - PROGRAMMING OF SERIAL DATA PROTOCOLS 29
FIGURE 5.5 - STEP TTL LEVEL, NEG. REF. 30
FIGURE 5.6 - STEP TTL LEVEL, POS. REF. 31
FIGURE 5.7 - STEP 24-35V UN-FILTERED, POS. REF. 32
FIGURE 5.8 - STEP 24 - 35V DC, POS. REF. 33
FIGURE 5.9 - STEP 24 - 35V DC, NEG. REF. 34
FIGURE 5.10 - STEP 35V UN-FILTERED, POS. REF. 35
FIGURE 5.11 - STEP 50 -70V DC, POS. REF. 36
FIGURE 5.12 - STEP 50 -70V DC, NEG. REF. 37
FIGURE 5.13 - STEP 50 -70V UN-FILTERED, POS. REF. 38
FIGURE 5.14 - STEP 100V DC, POS. REF. 39
FIGURE 5.15 - SPERRY & TOKIMEK INDUCTIVE TRANSMISSION SIGNAL 40
FIGURE 5.16 - ANSCHÜTZ MICRO STEP 41
FIGURE 5.17 - SYNCHRO 360:1 SIGNALS - TYPE A (50-60 HZ AC) 42
FIGURE 5.18 - SYNCHRO 360:1 SIGNALS - TYPE B (50-60 HZ AC) 43
FIGURE 5.19 - SYNCHRO 360:1 SIGNALS - TYPE C (50-60 HZ AC) 44
FIGURE 5.20 - SYNCHRO 360:1 SIGNALS - TYPE D1 (DC) 45
FIGURE 5.21 - SYNCHRO 360:1 SIGNALS - TYPE D2 (DC) 46

1. CHAPTER ONE -- DESCRIPTION

1.1. GENERAL DESCRIPTION.

LR40 is part of a family of Digital Gyro Repeaters: LR40, LR60 & LR61. The LR40 is designed for incremental transmission systems, such as 6 step-per degree or 360:1 synchro systems while the LR60 is designed for self-aligning 1:1 systems synchro systems. The LR61 is designed for dual compass 1:1 synchro systems with a dual-compass-compare function.

This family of ScanRepeaters is also know as "Lehmkuhl Repeaters", and earlier models were LR10, LR15, LR22 and LR32.

LR40 decodes the gyro transmission signal, displays heading data, analog turning information and provides various serial data outputs for slave repeaters and/or navigation computers.

A built-in monitor system is constantly checking the gyro signals and displays a visual alarm in case of malfunction.

1.1.1. HEADING DISPLAY

The HEADING DISPLAY is a large super-bright LED display that you can read at a distance of 10 meters or more. The decimal digit is made smaller in order to prevent misreading of the heading.

1.1.2. ANALOG TURNING INDICATOR

The ANALOG TURNING INDICATOR is a ring of 30 bright, solid state lamps (LED's). Five evenly spaced lamps light up at the same time. When the ship is turning to starboard, all five lights rotate in a clockwise direction, and correspondingly in an anti-clockwise direction for a port side turning of the ship. Before software version 3.0 the Analog Turning Indicator would step 6 step per degree. This has now changes as follow:

The ANALOG TURNING INDICATOR will step one step for each change in heading as decoded from the master compass or as received on the serial data input. This change is in effect with Software version 3.0, see 1.2. VERSIONS below.

Example a): When connected to a 6 step per degree output -- the Turning Indicator will step one step for each 1/6 of a degree -- as before.

Example b): When receiving NMEA serial data, the Turning Indicator will step one step for each change in heading received.

Please also note that the Analog Turning Indicator is no longer programmable.

1.1.3. OPERATOR CONTROL

Use the three touch buttons, with "tactile feedback", to control brilliance, to align initial display reading and to initiate test functions. REMOTE CONTROL is also possible.

1.2. VERSIONS

A description of Different LR40 Version

TYPE	DATE	DESCRIPTION of CHANGES and NEW FEATURES
LR40 (v1.0)	Aug. 1985	**NEW MODEL: Replaces LR22 and LR32**
LR40A (v1.1)	Jan. 1986	**HARDWARE MODIFICATION (NEW FEATURE):** Allowing Step-by-Step signals with **NEGATIVE REF.** in addition to normal Positive Ref.

TYPE	DATE	DESCRIPTION of CHANGES and NEW FEATURES
LR40B v1.2	Apr. 1988	**HARDWARE CHANGES & NEW SOFTWARE VERSION - v1.2:**
		Minor modification to the 360:1 synchro input circuit.
		NEW HARDWARE FEATURE: Remote control circuit modified to allow INTERNAL or EXTERNAL power to be used.
LR40C v1.3	Feb. 1989	**NEW SOFTWARE VERSION - v1.3:**
		NEW FEATURE: Allowing direct connection to Sperry SR100/SR200 inductive transmitter, thus eliminating the need for the "Re-Transmission Unit" in order to connect the LR40.
LR40D v2.1	Sep. 1991	**NEW SOFTWARE VERSION - v2.1:**
		By programming the DIL switch SW200-4&5, LR40 can send and receive NMEA 0183, "normal" LR40 10-bit format and LR40 10-bit format without ALARM byte.
		LR40 will operate in Slave Mode as long as it receives a serial signal.
		The LR40s can be daisy-chained as slave repeaters.
		LR40 will track step-by-step signals up to 2000 degrees per minute and the tracking rate for the SR100/SR200 connection is improved.
LR40D v2.2	Mar. 1992	**NEW SOFTWARE VERSION - v2.2:** (03.03.92)
		Version v2.2 corrects an error in v2.1 otherwise identical with v2.1.
		Version v2.2 is installed starting with serial no. 42671.
LR40E v2.3	May 1994	**HARDWARE CHANGES & NEW SOFTWARE VERSION - v2.3:**
		Hardware changes makes it possible to select between 2x RS422 OR 1x RS422 + 1x RS232 serial output.
		The following Baud Rates are now available: 9600, 4800, 2400 or 1200 bits / sec.
		VALID from Serial No. 45001.
LR40E v2.4	Oct. 1994	**NEW SOFTWARE VERSION - v2.4:** (24.10.94)
		Changes made in software to correct problem with Sperry MK37 MOD.0 and MOD.1 (un-filtered step)
		NMEA input will allow 3 decimal digits (for new Sperry compass)
		TO BE USED with LR40 from SERIAL No. 45001 and UP
LR40E v3.0	April 1995	**NEW SOFTWARE VERSION - v3.0:** (05.04.94)
		Programming of DIL switch SW200 has changed: More serial data formats are now available. See page 30 - Fig. 5.3 for details. (It is no longer possible to program the resolution of the Turning Indicator)
		Turning Indicator function has changed: The Turning Indicator will step one step for each change in heading decoded from the master compass or received on the serial data input.
		NMEA input change: The 3 decimal digits is rounded to nearest 1/10 degree. (For new Sperry compass).
		NMEA input change: Also accepts heading with no leading "0"s.
		USED on SERIAL No. 45455-500 and SERIAL No. 45517 ...
LR40E v3.1	June 1995	**NEW SOFTWARE VERSION - v3.1:** (02.06.95)
		Display muliplexing software upgraded to avoid display flikkering at low brightness. LR40 v3.1 can receive special alarm codes for "Bearing Freeze" generated by LR60.
		STARTS w/ Serial #: LR40-AC / 45570 -- LR40-DC / 45463

2. CHAPTER TWO - OPERATING INSTRUCTIONS

When Power to the LR40 is turned on, the Heading Display will read **000.0** and the numbers will be flashing on/off. The flashing display indicates a **POWER-ON ALARM**, meaning that the displayed Heading has not been adjusted to the actual Heading. The Power-on alarm will also appear in case of a "Brown Out".

However, by using the LR40-DC (9-36V DC), you will normally avoid the power alarm problem by connecting the LR40 directly to the 12V DC or 24V DC supply on board.

The unit must then be adjusted to display the correct heading using the Front Panel Control Buttons. Note! When adjusting the display, you will turn off the ALARM and delete the alarm codes.

When the LR40 is connected as a "slave repeater" and receiving serial data -- the POWER-ON ALARM is disabled.

2.1. BRILLIANCE CONTROL

Press the UP arrow to increase the display brilliance or the DOWN arrow to decrease the display brilliance.

2.2. HEADING DISPLAY ADJUST

To increase or decrease the display reading press the UP or the DOWN arrow simultaneously with the CENTER button. NOTE! **Adjusting the heading display will CANCEL all ALARMS.**

It is NOT possible to adjust the Heading Display when the LR40 is working as "SLAVE REPEATER". It is, however, possible to reset the alarm function.

When adjusting the Heading Display, the numbers will change slowly at first and then increase to a maximum "count rate" of approximately 10 degrees per second.

2.3. LAMP TEST

Press **BOTH** arrow buttons simultaneously for LAMP TEST. The Heading Display and the Turning Indicator (the LED ring) will flash. The Heading Display will show **888.8** and the Turning indicator will have all LEDs on.

2.4. STATUS TEST

When pressing and holding the center button only -- for at least 5 seconds -- a STATUS CODE will be displayed instead of the Heading. With no errors the status display will show **000.0** If there is an alarm - the status display will show a code indicating the type of alarm. Fore more details see **CHAPTER SIX: TROUBLE SHOOTING.**

THIS PAGE INTENTIONALLY LEFT BLANK.

3. CHAPTER THREE -- TECHNICAL SPECIFICATION

3.1. GYRO INPUT

LR40 can be connected to most gyro compasses with 360:1 and 180:1 transmission systems, but also to some specialized transmission systems, see summary below and Chapter 5 for details.

The LR40 can accept signals from many different gyro compasses and must be pre-programmed for the specific compass or signal type at hand. Please follow the instructions in Chapter 4 and Chapter 5.

SUMMARY of GYRO INPUT SIGNALS:

3 phase Step-by-Step (6 steps per degree):	Normal Step signals w/ Pos. or Neg. Ref. voltages	24 - 100V DC.
3-phase Inductive Transmitter (6 steps per degree in LR40):	Direct output from Sperry SR120 Mother Compass	24V AC, 400 HZ.
3 phase 360:1 AC Synchro: (6 steps per degree in LR40):	Synchro signals with 360:1 gear ratio. (Anschütz)	Ref.: 50-150V AC, 50-500 Hz. Line: 24 - 90V AC
3 phase 360:1 DC Synchro: (6 steps per degree in LR40):	DC Ref. +/- 24V DC (Microtecnica)	
2 phase 24V DC Step-by-Step. (6 steps per degree in LR40):	Microstep (Ansch. ST14 - Gyrostar)	(24 steps per degree)

3.2. SERIAL DATA INPUT & OUTPUT

SUMMARY of SERIAL DATA -- INPUT & OUTPUT:

SERIAL DATA INPUT	NMEA, RGC11, ANSCH., LR40	1200, 2400, 4800 or 9600 b/s
SERIAL DATA OUTPUT	NMEA, RGC11, ANSCH., LR40	1200, 2400, 4800 or 9600 b/s

All serial communication can be programmed for 1200, 2400, 4800 or 9600 bit/sec. However, **the SERIAL DATA INPUT & SERIAL DATA OUTPUT will always operate at the same baud rate.**

The SERIAL DATA INPUT & SERIAL DATA OUTPUT can be programmed to use different data protocols simultaneously.

Each LR40 has two serial data output channels: 2x RS422 or 1x RS422 + 1x RS232 serial output. Each LR40 has one (1) serial input channel. See 3.5. ELECTRICAL SPECIFICATION for more details.

3.2.1. SERIAL DATA "SLAVE" MODE -- INPUT SOFTWARE

LR40 will automatically adjust to operate in serial-data "slave" mode, if serial-data is connected and a "good signal" is detected during reset or during the "power-on" sequence. It will then operate in slave mode until the serial signal is disconnected and the unit is reset. The unit will operate in "master" mode if there is no serial-data signal available during the "power-on" or "reset" sequence.

3.2.2. SERIAL DATA INPUT ALARMS

The units will display an alarm if the serial signal disappears and a "slave" repeater will not indicate a POWER ALARM as long as it operates in slave mode. The "slave" will align itself automatically to the same heading as that displayed by the "master" repeater.

3.2.3. SERIAL DATA INPUT/OUTPUT DAISY-CHAINING

When working as a "slave" repeater, the "slave" will re-transmit the heading received from the "master" repeater. In this manner the **ScanRepeater** can be "daisy-chained". Any number of "slave" repeaters can therefore be connected to one "master" repeater.

The following data protocols are available: NMEA 0183, LR40/60 standard format, LR40/60 without ALARM-code, Robertson RGC11 protocol, Anschütz ST20 protocol (see the following pages for details).

3.2.4. LR40 NMEA 0183 FORMAT

HARDWARE:	RECEIVE RS422. SEND RS422 or RS232C (see section 3.4.4.)
BAUD RATE:	Programmable to 9600, 4800, 2400 or 1200 bits per sec.
FORMAT:	1 START bit, 8 DATA bits, 1 STOP bit.
SEND / RECEIVE:	Will SEND & RECEIVE individual formats, but w/ same BAUD RATE
SEND FREQUENCY:	8 times every second, when transmitting at 2400,4800 and 9600 b/sec. 6 times every second, when transmitting at 1200 b/sec.
RECV. FREQUENCY:	Will accept up to 30 times per sec @ 9600 b/sec.

NMEA HEADING SENTENCE:
$HEHDT,xxx.x,a<CR><LF> where:

$	is the standard NMEA 0183 start of sentence character
HE	is the talker identifier for a gyrocompass **(DON'T CARE)**
HDT	is the true heading message (sentence) identifier
x.xxx	heading data to 1/1000 of a degree (rounded to nearest 1/10)
a	status: **T** if TRUE heading is available, **V** if: "Compass input is lost", "needs to be synchronized" or "invalid heading data".
<CR><LF>	carriage return and line feed.

NO checksum is transmitted.

EXAMPLES:
Transmitting 359.8 degrees, with no alarm in repeater:
$HEHDT,359.8,T<CR><LF>

Transmitting 359.8 degrees, with alarm in repeater:
$HEHDT,359.8,V<CR><LF>

ALARMS:
When there is an alarm in the "master", the repeater will ALSO send, **once every second**, a coded text messages indicating the fault reported by the repeater software:

NMEA ALARM SENTENCE:
$HEALM,s,m<CR><LF> where:

$	is the standard NMEA 0183 start of sentence character.
HE	is the talker identifier for a gyrocompass **(DON'T CARE)**
ALM	is the alarm message (sentence) identifier
s	is the severity indicator: "-***W***-" indicates a non-fatal warning and "-***F***-" indicates a fatal warning **! WE ONLY USE: "F"!**
m	is a text message describing the alarm as follows: **ScanRepeater^ALARM:^nnn**
"^"	means blank space
"nnn"	is a ScanRepeater internal 3 digit alarm code. (The various alarm codes are listed in the Instruction Manual - Chapter 7.)
<CR><LF>	carriage return and line feed

NO checksum is transmitted.

EXAMPLES:
Transmitting alarm message:
$HEALM,-F-,ScanRepeater ALARM: 400<CR><LF>
(see Chapter 6 for Alarm codes).

3.2.5. LR40 10-BIT FORMAT

HARDWARE:	RECEIVE RS422. SEND RS422 or RS232C (see section 3.4.4.)
BAUD RATE:	Programmable to 9600, 4800, 2400 or 1200 bits per sec.
FORMAT:	1 START bit, 8 DATA bits, 1 STOP bit.
SEND / RECEIVE:	Will SEND & RECEIVE individual formats, but w/ same BAUD RATE
SEND FREQUENCY:	CONTINUOUS, but with a short delay between each byte.
UPDT. FREQUENCY:	Heading is updated 192 times per second @ 9600 b/sec.

The data is transmitted continuously, one message after the other. Each message consists of 5 bytes. 4 bytes with HEADING information (3598) and 1 byte with ALARM STATUS CODE. When HEADING data is transmitted, BIT 08 and BIT 09 are "low". BIT 08 and BIT 09 are both "high" when the ALARM STATUS CODE is transmitted. Alarm byte: **ALARM = CA_H, NO ALARM = $C0_H$.**

SOFTWARE PROTOCOL:

BIT 01:	start bit		
BIT 02:	digit value	(LSB)	4 bits BCD code
BIT 03:	digit value	.	containing HEADING
BIT 04:	digit value	.	information
BIT 05:	digit value	(MSB)	one digit at a time
BIT 06:	digit address	(LSB)	00 = .1 01 = 1.
BIT 07:	digit address	(MSB)	10 = 10. 11 = 100.
BIT 08:	mode control	(LSB)	00 = heading data
BIT 09:	mode control	(MSB)	11 = alarm status
BIT 10:	stop bit		

EXAMPLES:
Transmitting 359.8 degrees, with no alarm in repeater:

START BIT 00010000 STOPBIT 8
START BIT 10011000 STOPBIT 9
START BIT 10100100 STOPBIT 5
START BIT 11001100 STOPBIT 3
START BIT 00000011 STOPBIT NO ALARM in MASTER REPEATER
START BIT 00010000 STOPBIT 8
etc. ...

Transmitting 359.8 degrees, with alarm in repeater:

START BIT 00010000 STOPBIT 8
START BIT 10011000 STOPBIT 9
START BIT 10100100 STOPBIT 5
START BIT 11001100 STOPBIT 3
START BIT 01010011 STOPBIT ALARM in MASTER REPEATER
START BIT 00010000 STOPBIT 8
etc. ...

3.2.6. LR40 10-BIT FORMAT WITHOUT ALARM-CODE

HARDWARE:	RECEIVE RS422. SEND RS422 or RS232C (see section 3.4.4.)
BAUD RATE:	Programmable to 9600, 4800, 2400 or 1200 bits per sec.
FORMAT:	1 START bit, 8 DATA bits, 1 STOP bit.
SEND / RECEIVE:	Will SEND & RECEIVE individual formats, but w/ same BAUD RATE
SEND FREQUENCY:	CONTINUOUS, but with a short delay between each byte.
UPDT. FREQUENCY:	Heading is updated 240 times per second @ 9600 b/sec.

Data is transmitted continuously, one message after the other. Each message consists 4 bytes with HEADING information (3598). The **ALARM STATUS CODE** byte from LR40/60 (see above) **is not transmitted**. BIT 08 and BIT 09 are always "low".

SOFTWARE PROTOCOL:

BIT 01:	start bit		
BIT 02:	digit value	(LSB)	4 bits BCD code
BIT 03:	digit value	.	containing HEADING
BIT 04:	digit value	.	information
BIT 05:	digit value	(MSB)	one digit at a time
BIT 06:	digit address	(LSB)	00 = .1 01 = 1.
BIT 07:	digit address	(MSB)	10 = 10. 11 = 100.
BIT 08:	mode control	(LSB)	ALWAYS = "0"
BIT 09:	mode control	(MSB)	ALWAYS = "0"
BIT 10:	stop bit		

EXAMPLES:
Transmitting 359.8 degrees, with no alarm in repeater:

START BIT 00010000 STOPBIT 8
START BIT 10011000 STOPBIT 9
START BIT 10100100 STOPBIT 5
START BIT 11001100 STOPBIT 3
START BIT 00010000 STOPBIT 8
etc....

NOTE! This format can be used to receive serial data directly from the S.G.BROWN SGB1000A compass. **It requires that the SGB1000A has the BPR32 SOFTWARE OPTION and the Robertson PROGRAMMING PLUG.**

3.2.7. LR40 with ROBERTSON RGC11 FORMAT

HARDWARE:	RECEIVE RS422. SEND RS422 or RS232C (see section 3.4.4.)
BAUD RATE:	SELECT 9600 bits per sec.
FORMAT:	1 START bit, 8 DATA bits, 1 STOP bit. (NO PARITY)
SEND / RECEIVE:	Will SEND & RECEIVE individual formats, but w/ same BAUD RATE
SEND FREQUENCY:	EVERY 1 sec. min. Real Time transmission when Heading Change has occurred
UPDT. FREQUENCY:	REAL TIME up to MAX. 9 degrees sec. TURNING RATE

Data is transmitted in "bursts" once every second if there is no change in the Heading. The time interval between "data bursts" will become shorter and shorter when the ship's rate of turn increases. For turning rates of greater that approximately 9 degrees per sec. (540 degrees per minute) the data will be transmitted continuously:

DATA FORMAT:
STX K xxx.x L xx.x ETX where:

STX	START of Text (HEX 02)
K	Heading IDENTIFIER
xxx.x	Ship's HEADING in degrees and decimal degree
L	Speed IDENTIFIER
xx.x	Ship's SPEED in Knots
CR	END of Text (HEX 03)

SOFTWARE PROTOCOL:

BIT 01:	start bit		
BIT 02:	data BIT 0		
BIT 03:	data BIT 1		
BIT 04:	data BIT 2		
BIT 05:	data BIT 3		
BIT 06:	data BIT 4		
BIT 07:	data BIT 5		
BIT 08:	data BIT 6		
BIT 09:	data BIT 7		ALWAYS = 0
BIT 10:	stop bit		

3.2.8. LR40 with ANSCHÛTZ ST20 INTERNAL SERIAL FORMAT

HARDWARE:	RECEIVE RS422. SEND RS422 or RS232C (see section 3.4.4.)
BAUD RATE:	SELECT 9600 bits per sec.
FORMAT:	1 START bit, 8 DATA bits, 1 STOP bit. (NO PARITY)
SEND / RECEIVE:	Will SEND & RECEIVE individual formats, but w/ same BAUD RATE
SEND / RECEIVE UPDATE FREQ.:	Heading updated every 20 m sec. Max. Real Time RATE of TURN update is therefor 5 degrees /sec.(300 deg./min.)

Eighteen (16) bytes of data is transmitted every 20 milli-seconds second and every data package is started with STX (HEX 02) and terminated with ETX (HEX 03) for a total of 18 bytes. LR40 uses byte <b1> and <b2> to read the Heading and <b11> and <b12> to check for compass alarms.

DATA FORMAT:
STX<b1><b2><b3><b4><b5><b6><b7><b8><b9><b10><b11><b12>
<b13><b14><b15><b16>ETX

where:

STX	START of Text (HEX 02)
<b1>	01xxxxxx 6 MOST significant bits of 12 bit GYRO HEADING
<b2>	01xxxxxx 6 LEAST significant bits of 12 bit GYRO HEADING
<b3>..<b10>	VARIOUS OTHER INFORMATION NOT USED by LR40
<b11>	01abcdef SYSTEM STATUS **(a & b used by LR40 to indicate alarm)**
<b12>	01ghijkl SYSTEM STATUS (not used by LR40)
<b13>..<b15>	COMPASS DATA not used by LR40
<b16>	CHECKSUM -- not used by LR40
CR	END of Text (HEX 03)

SOFTWARE PROTOCOL:

BIT 01:	start bit		
BIT 02:	data BIT 0		
BIT 03:	data BIT 1		
BIT 04:	data BIT 2		
BIT 05:	data BIT 3		
BIT 06:	data BIT 4		
BIT 07:	data BIT 5		
BIT 08:	data BIT 6		
BIT 09:	data BIT 7		
BIT 10:	stop bit		

3.3. ACCURACY

Within 0.2 degrees of the gyro compass.

3.4. ELECTRICAL SPECIFICATIONS.

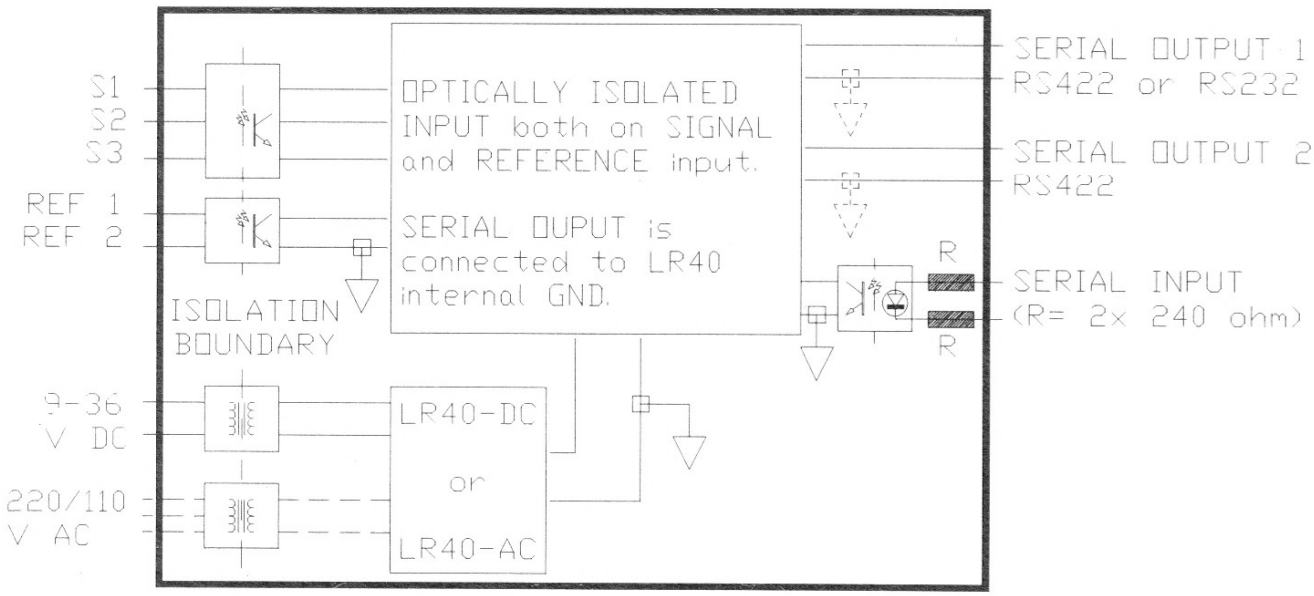

Figure 3.1 - LR40 ELECTRICAL BLOCK DIAGRAM

PLEASE NOTE that you must SPECIFY LR40 -DC or LR40 -AC, when ordering.

3.4.1. MAINS

LR40 TYPE	MAINS	COMMENT
LR40 ***-AC***	115 or 230V AC +/-10%, 50-60 Hz.	You must SPECIFY LR40 -AC, when ordering. (400 Hz available on request)
LR40 ***-DC***	9-36V DC, Galvanically Isolated.	You must SPECIFY LR40 -DC, when ordering.

3.4.2. POWER CONSUMPTION

7W max.

3.4.3. GYRO INPUT SIGNALS

GYRO INPUT SIGNALS: AC (50 to 400 Hz) or DC ranging from 20 volts to 150 volts, depending on the model type and programming.

GYRO INPUT:

LR40 TYPE	SIGNAL DESCRIPTION	SIGNAL LEVEL	LR40 INPUT LOADING
LR40	ALL SIGNALS except M-TYPE and SKR80-SKR82 step signals	20 - 150 VOLT	10 to 25 mA typical

3.4.4. SERIAL DATA

OUTPUT SUMMARY:

TYPE	CABLE (shielded cable w/ twisted pairs)	DRIVER	LOAD	SIGNAL DESCRIPTION
RS422	300 meters	uA9638	5xLR40(slave mode)	0-5V (30 mA)
RS232	20 meters	MAX232	1xCOMPUTER	+/- 10V (10 mA)

1. **OUTPUT option 1 (install links on RS422 -- see Fig. 5.2):**
   2 x RS422 / DUAL balanced line driver:
   5V signal swing. MAX. 30 mA load (uA9638).

2. **OUTPUT option 2 (install links on RS232 -- see Fig. 5.2):**
   1 x RS232 +/- 10V signal swing, MAX. 10 mA load. (MAX232 CPE).
   1 x RS422 / DUAL balanced line driver: 5V signal swing. MAX. 30 mA load (uA9638).

3. **INPUT:**
Opto Isolated input. Input Impedance is 2 x 240 ohm + one LED.

3.5. ENVIRONMENTAL SPECIFICATIONS.

3.5.1. OPERATING

- 0 deg.C to + 55 deg.C / Max. rel. humidity: 95%

3.5.2. STORAGE

-25 deg.C to + 70 deg.C

3.6. MECHANICAL SPECIFICATIONS

3.6.1. MATERIAL

ALUMINUM

3.6.2. DIMENSIONS

Width : 192 mm
Height : 096 mm
Depth : 110 mm

3.6.3. WEIGHT

2 kgs (in box), 2.7 kg in EXPORT PACKAGE

4. CHAPTER FOUR - INSTALLATION & SETTING-UP PROCEDURES

Please follow the Installation Guide below as closely as possible. Our warrantee is only valid if the unit has been properly installed and programmed.

The "Certificate of Guarantee" and a number of "Implementation of Guarantee Cards" are enclosed in the back of this manual. **Please fill in the "Implementation of Guarantee" card and return it to Scandinavian Micro Systems A/S.**

4.1. MECHANICAL MOUNTING

The repeaters can be "cradle"- mounted on a table-top, on the bulk-head or on the deck-head. The repeaters can also be "panel"-- mounted, **see Fig. 4.1, 4.2, 4.3 & 4.4.** For Bridge Wing Mounting see **Fig. 4.5 & 4.6.**

4.1.1. CRADLE MOUNTING - INSTALLATION PROCEDURE.

A. Use "Cradle" as guide and drill holes for fastening screws in bulkhead.

B. Fasten "Cradle" to bulkhead and fit the repeater unit.

4.1.2. PANEL MOUNTING - INSTALLATION PROCEDURE.

A. Cut a 189 x 97 MM hole in the panel according to Fig. 4.3 & Fig. 4.4 When installing the BRIDGE WING KIT, use Fig. 4.5 & Fig. 4.6 (cut-out must be: 189 x 106 MM).

B. Remove the screws marked B in Fig. 4.7 and pull out -- GENTLY --the PCB assembly from the cabinet.

C. Remove nuts and screws marked "C" in Fig. 4.7

D. Re-Insert the same screw in the same hole, but from the opposite side (from inside the unit) and replace the nut on the outside of the unit.

E. Re-Assemble the unit.

F. Use the supplied panel-mounting-brackets and insert the supplied "self-tapping" screw in the hole closest to the edge.

G. Insert the unit into "cut-out" hole -- from the front of the panel.

H. Tread the panel-mounting-brackets from behind and onto the M3 screw protruding out of the unit and fasten using the supplied "wing-nut", see Fig. 4.4.

I. Turn the "wing-nut" clockwise and pull the unit secure unto the panel. Use the "self-tapping" screw that you inserted into bracket and secure brackets.

Figure 4.1 - BULK-HEAD MOUNTING

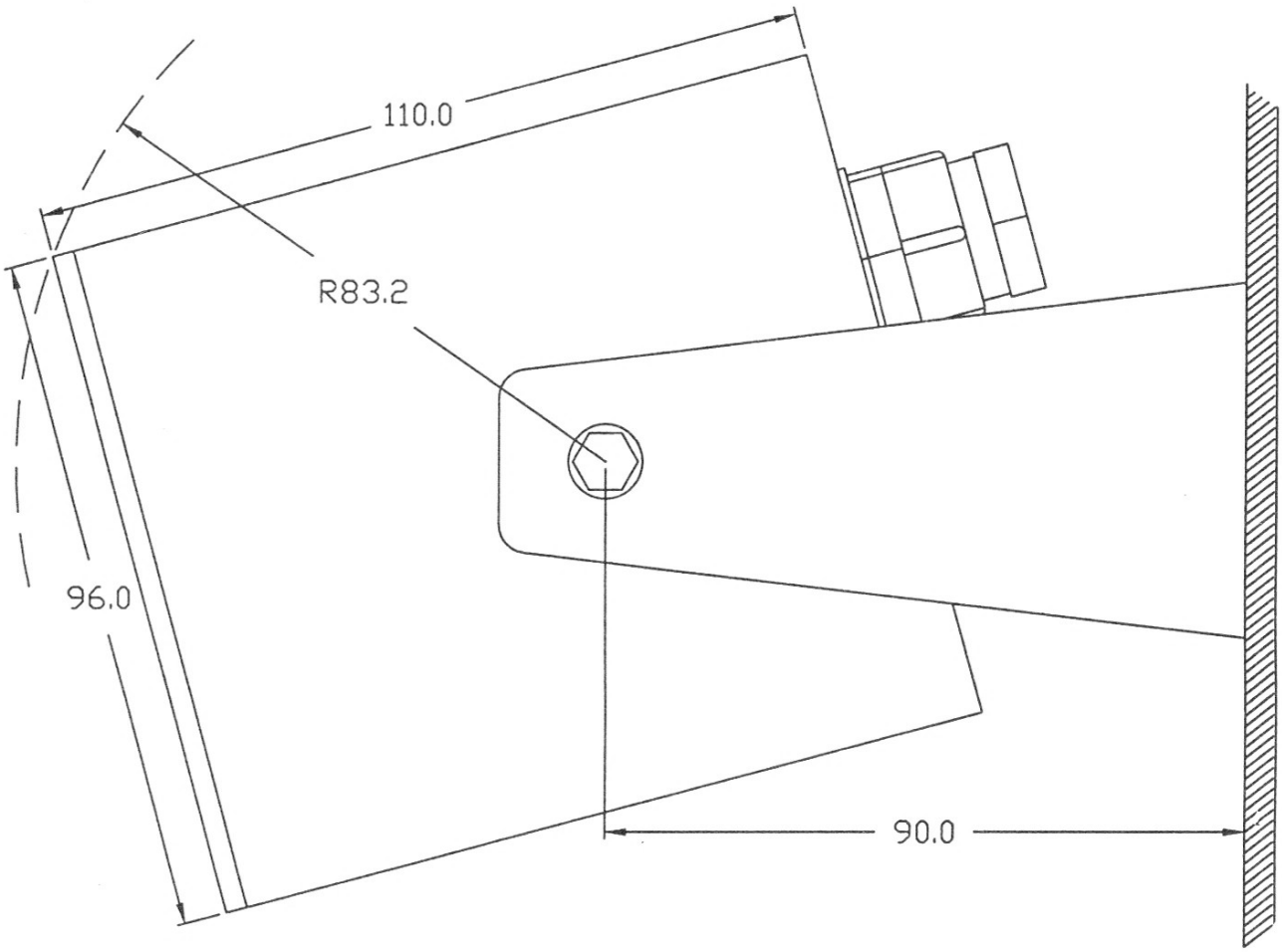

Figure 4.2 - MOUNTING OF CRADLE -- DIMENSIONS

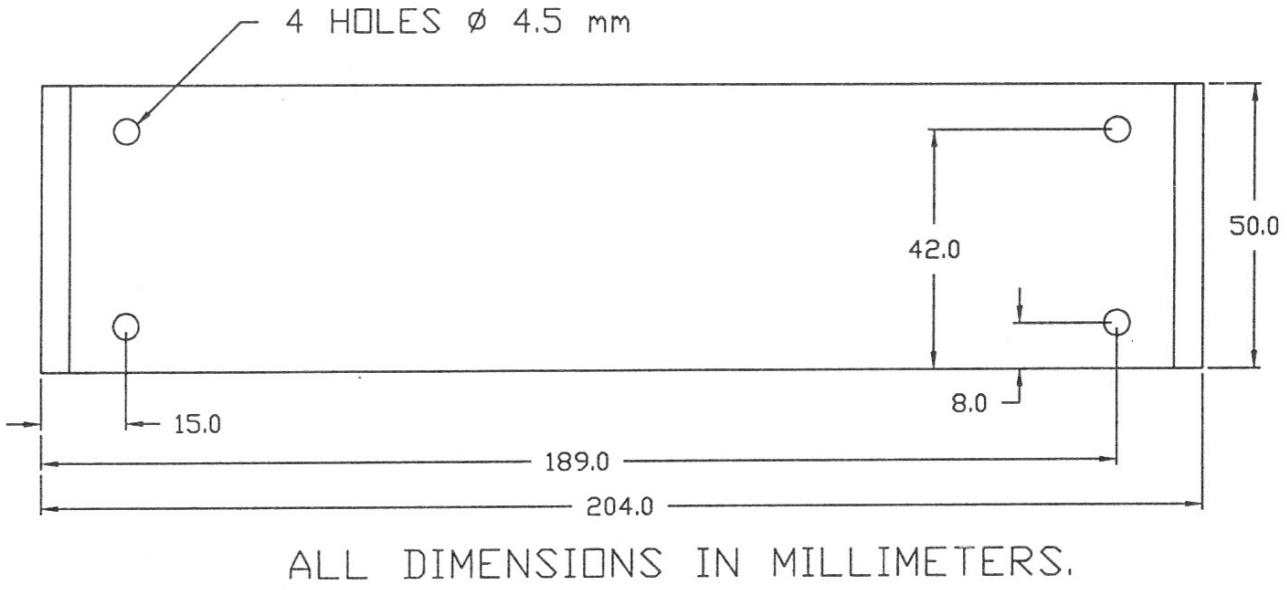

Figure 4.3 - PANEL MOUNTING -- CUT-OUT

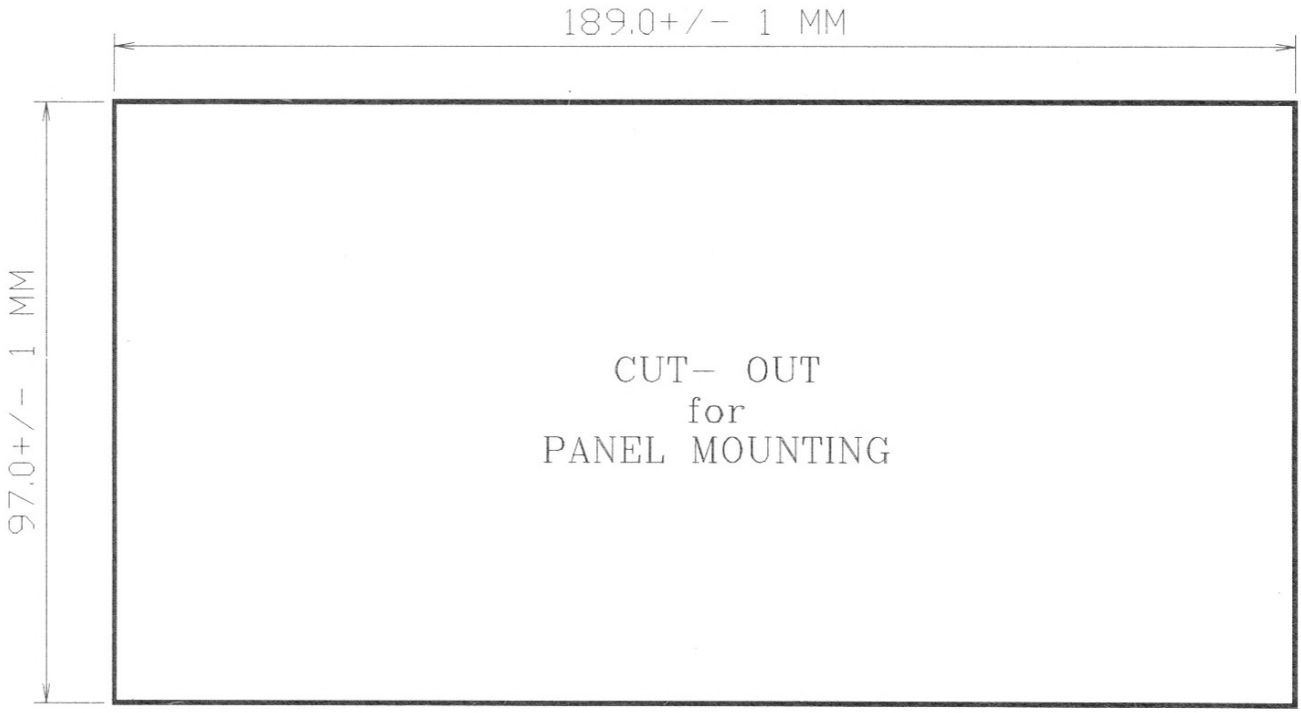

Figure 4.4 - PANEL MOUNTING -- FIXING DETAILS

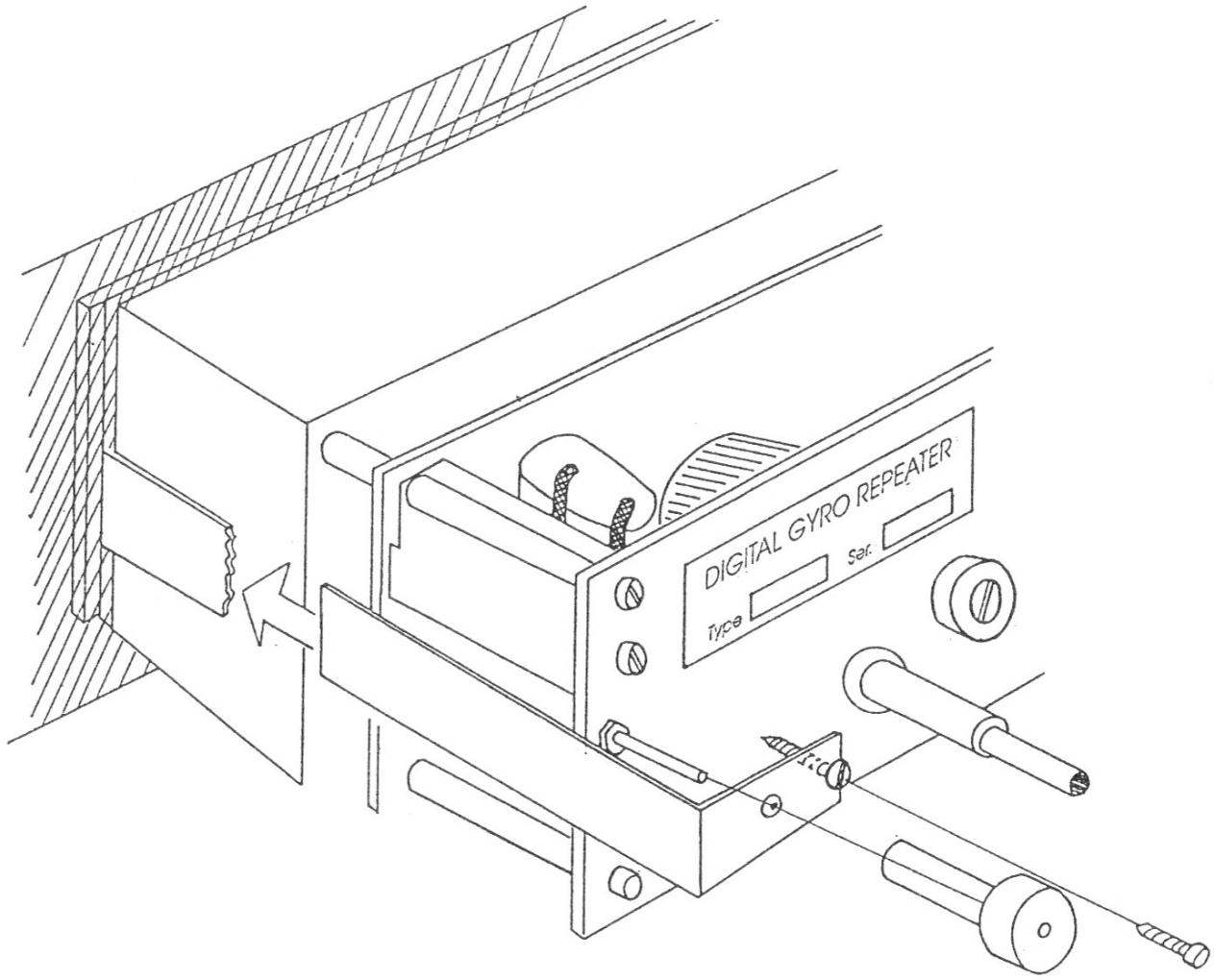

Figure 4.5 - PANEL MOUNTING w/ WING-KIT -- SIDE VIEW

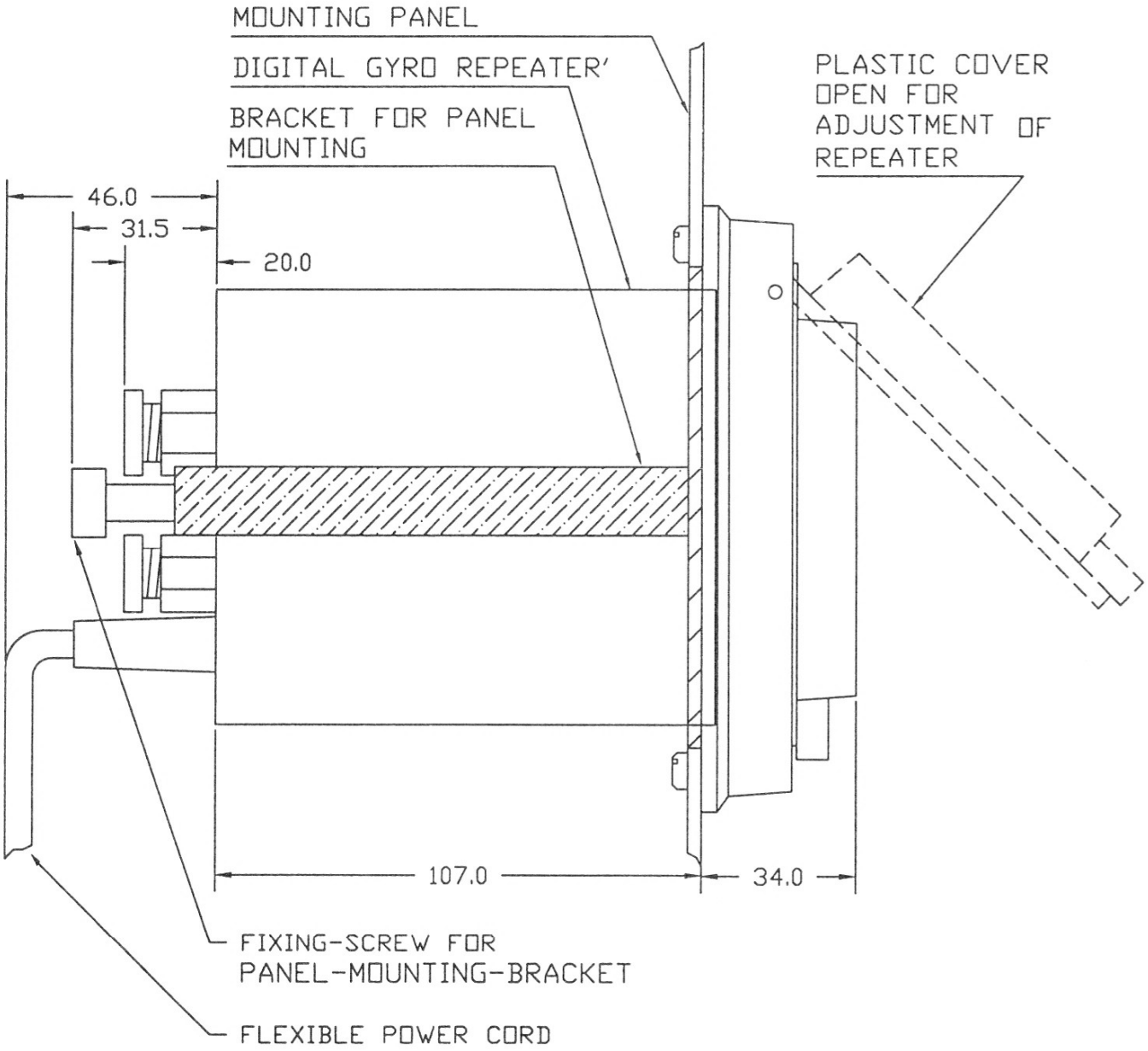

Figure 4.6 - PANEL MOUNTING w/ WING-KIT -- FRONT VIEW

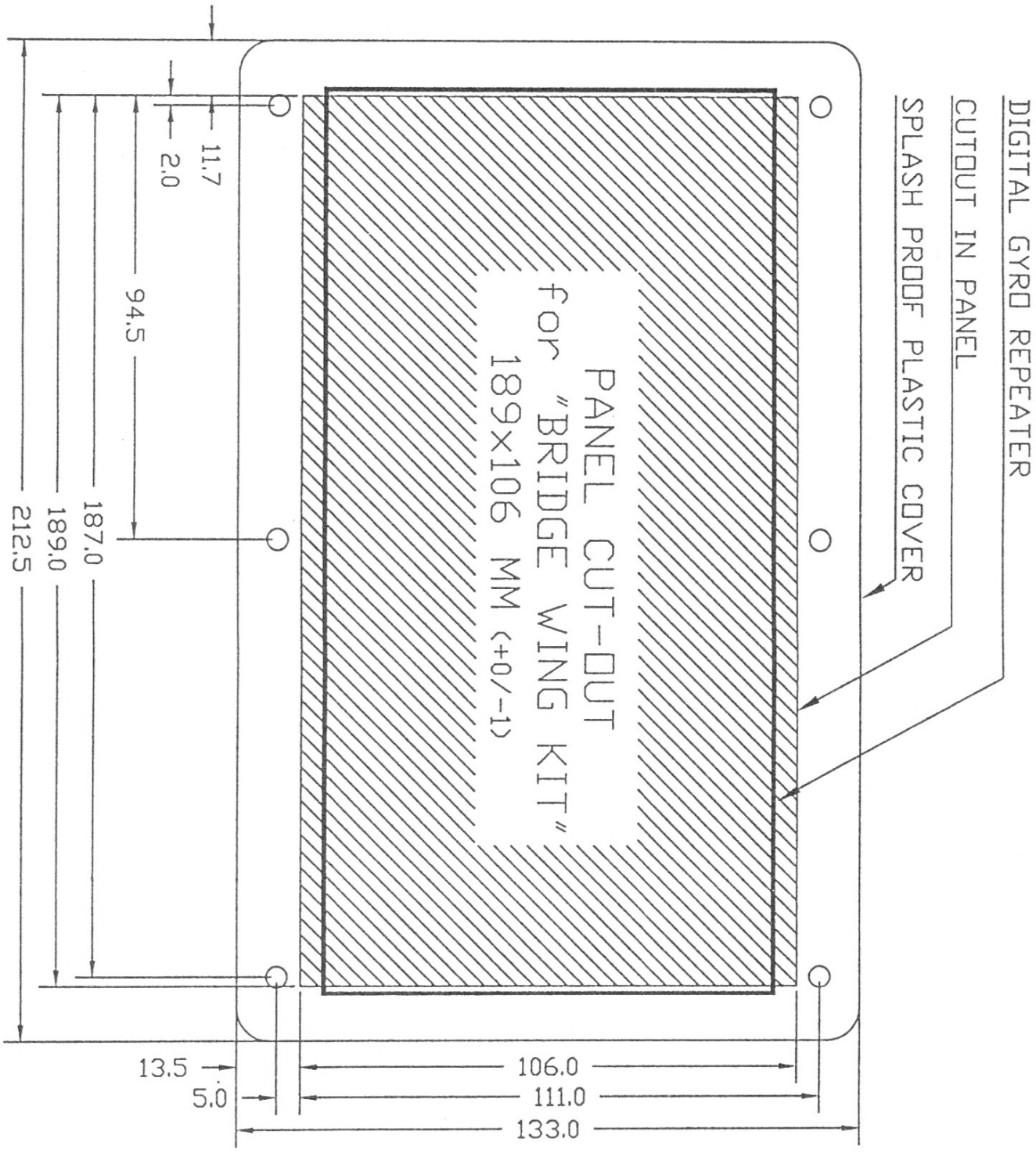

Figure 4.7 - LR40 REAR COVER -- DETAILS

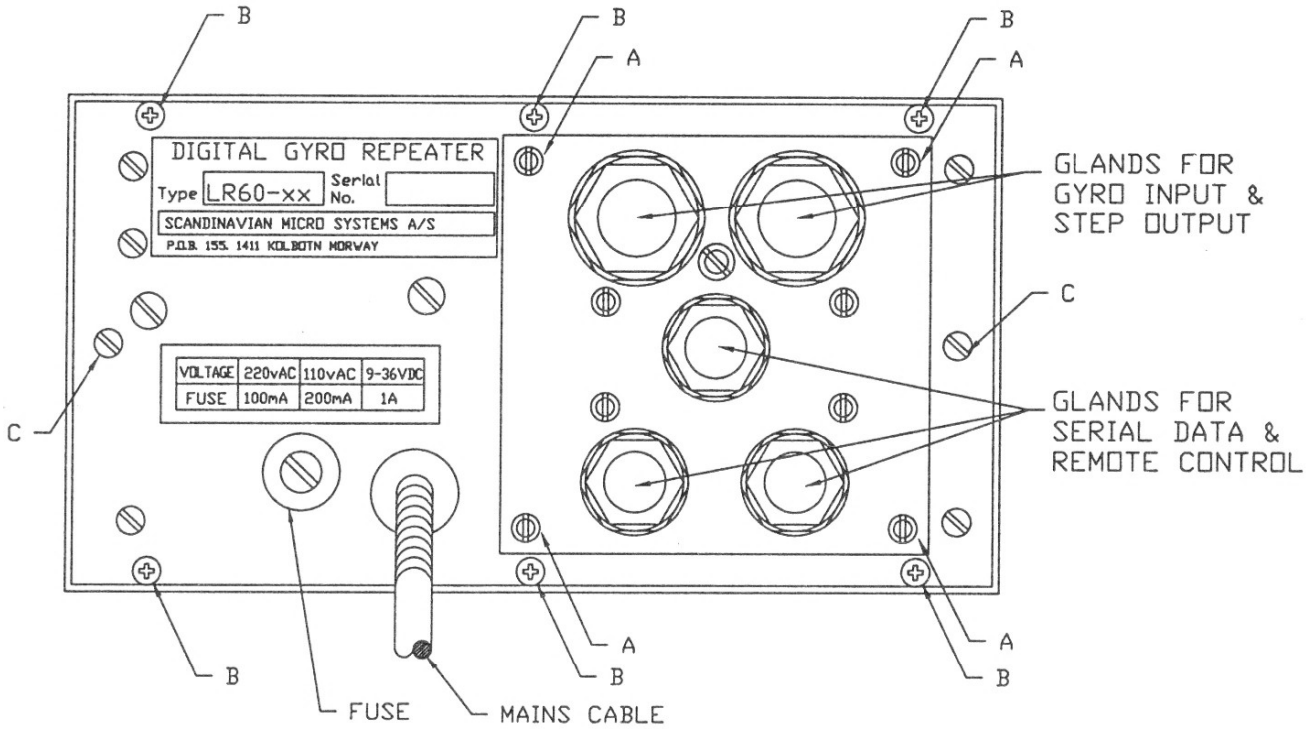

A) FIXING SCREWS FOR TERMINAL ASSEMBLY (UN-SCREW TO CONNECT CABLES)
B) FIXING SCREWS FOR REAR COVER (UNSCREW TO PROGRAM THE UNIT)
C) SCREWS FOR PANEL MOUNTING -- UNSCREW AND REFIT FROM INSIDE -- SEE FIG.4.1.D

Figure 4.8 - CABLE TERMINATION -- DETAILS

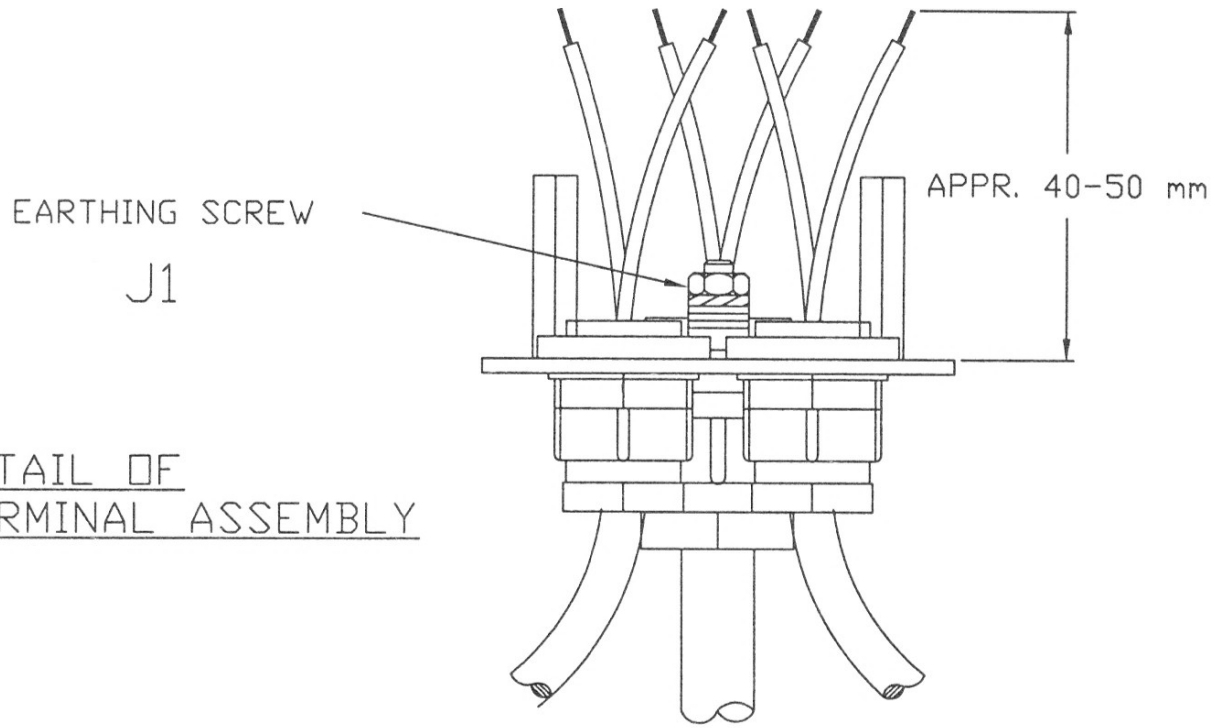

Figure 4.9 - CABLE CONNECTIONS -- CONNECTOR PCB

- For connection Gyro Transmission Signals, see Chapter 5, FIG. 5.5 through FIG. 5.20.
- For connecting Serial Data, see also FIG. 4.10 and FIG. 4.11 as well as section **5.2 PROGRAMMING OF SERIAL DATA** (page 28 and 29).
- For connection Remote Control, see also FIG. 4.10 and section **7.2.2 DRAWING SR4192** (page 55).

PLEASE DO NOT CONNECT GYRO TRANSMISSION SIGNALS TO J402 -- AS THIS WILL PERMANENTLY DAMAGE THE UNIT.

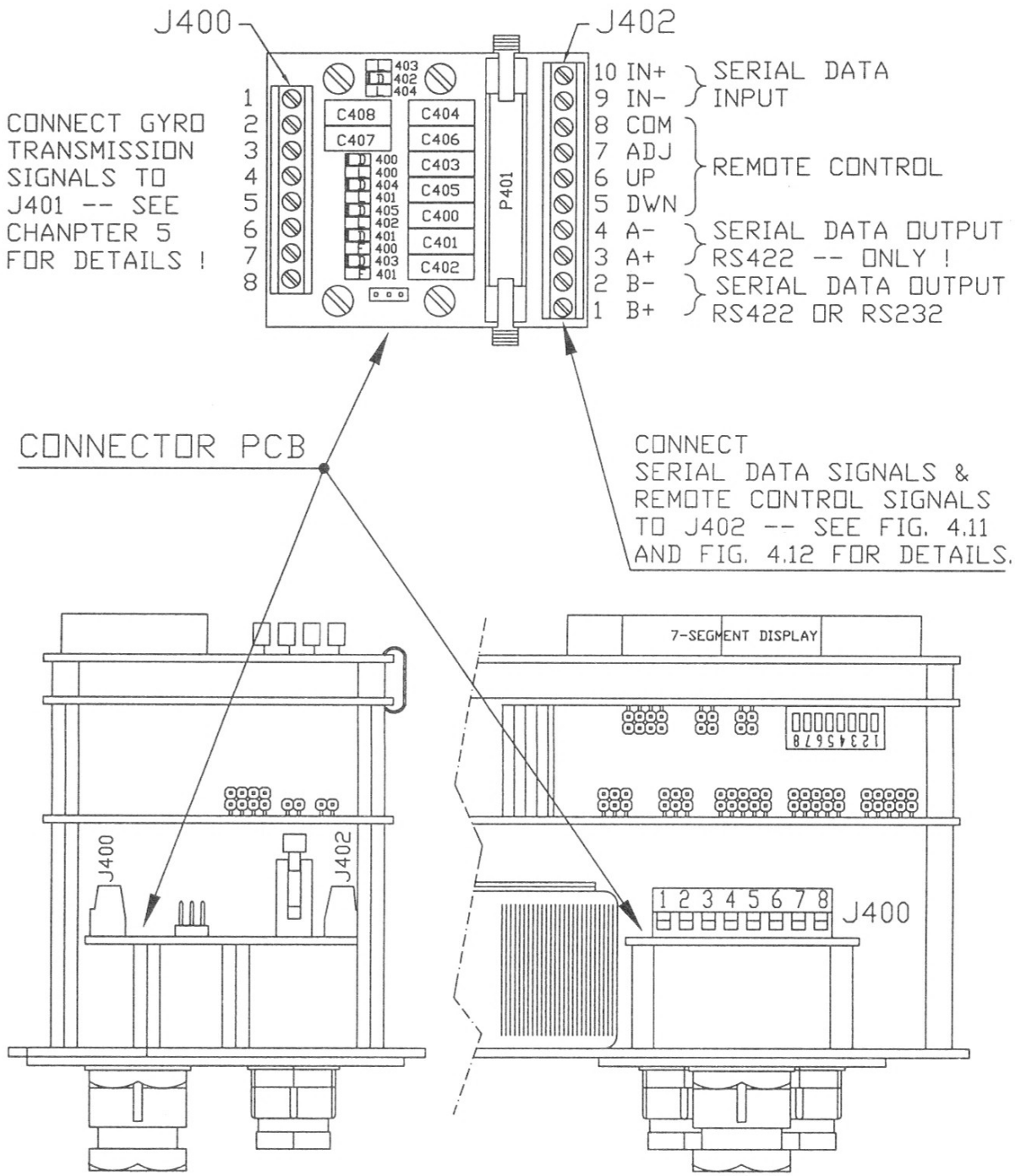

Figure 4.10 - TYPICAL CABLE PLAN

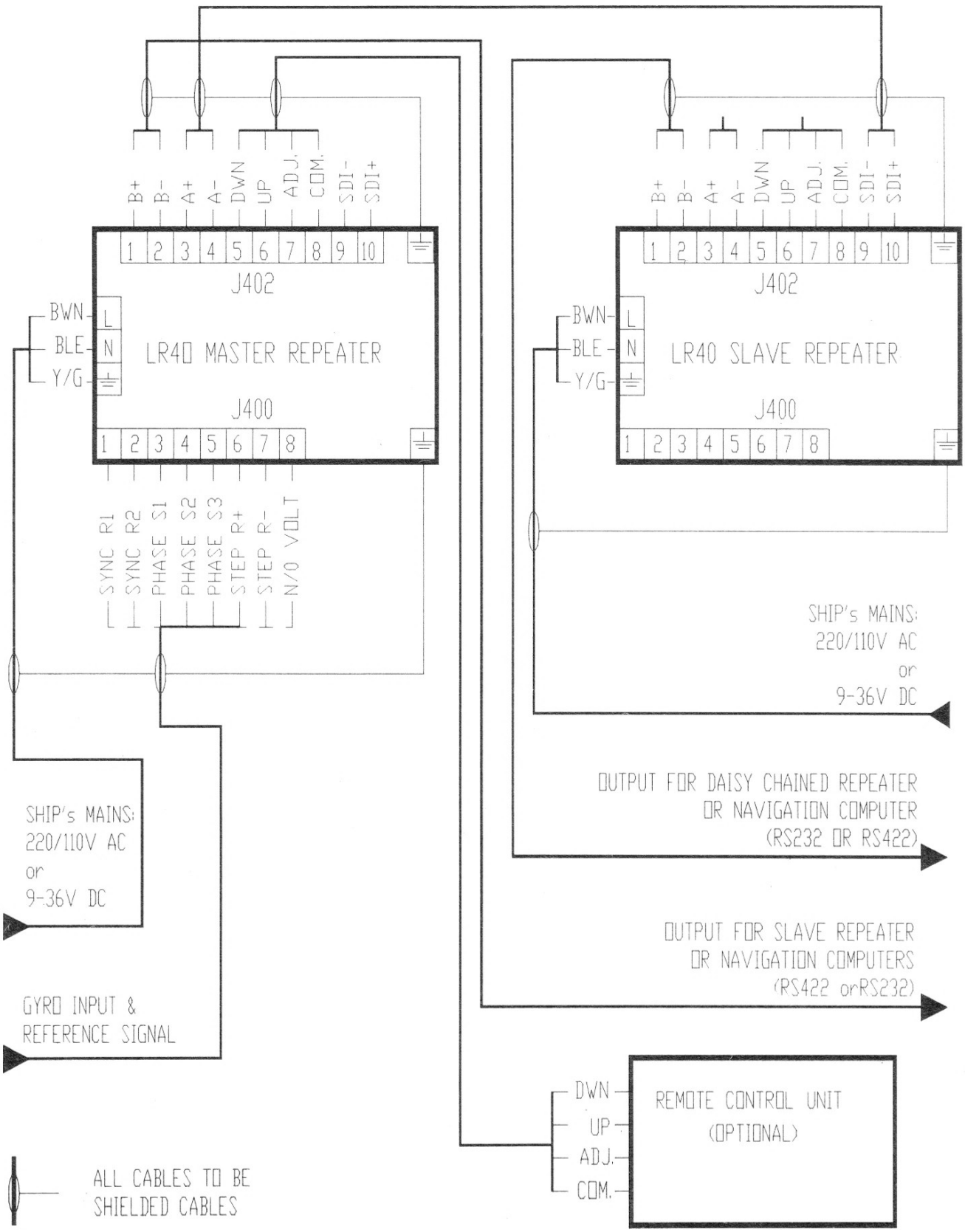

Figure 4.11 - TYPICAL SERIAL DATA CONNECTIONS

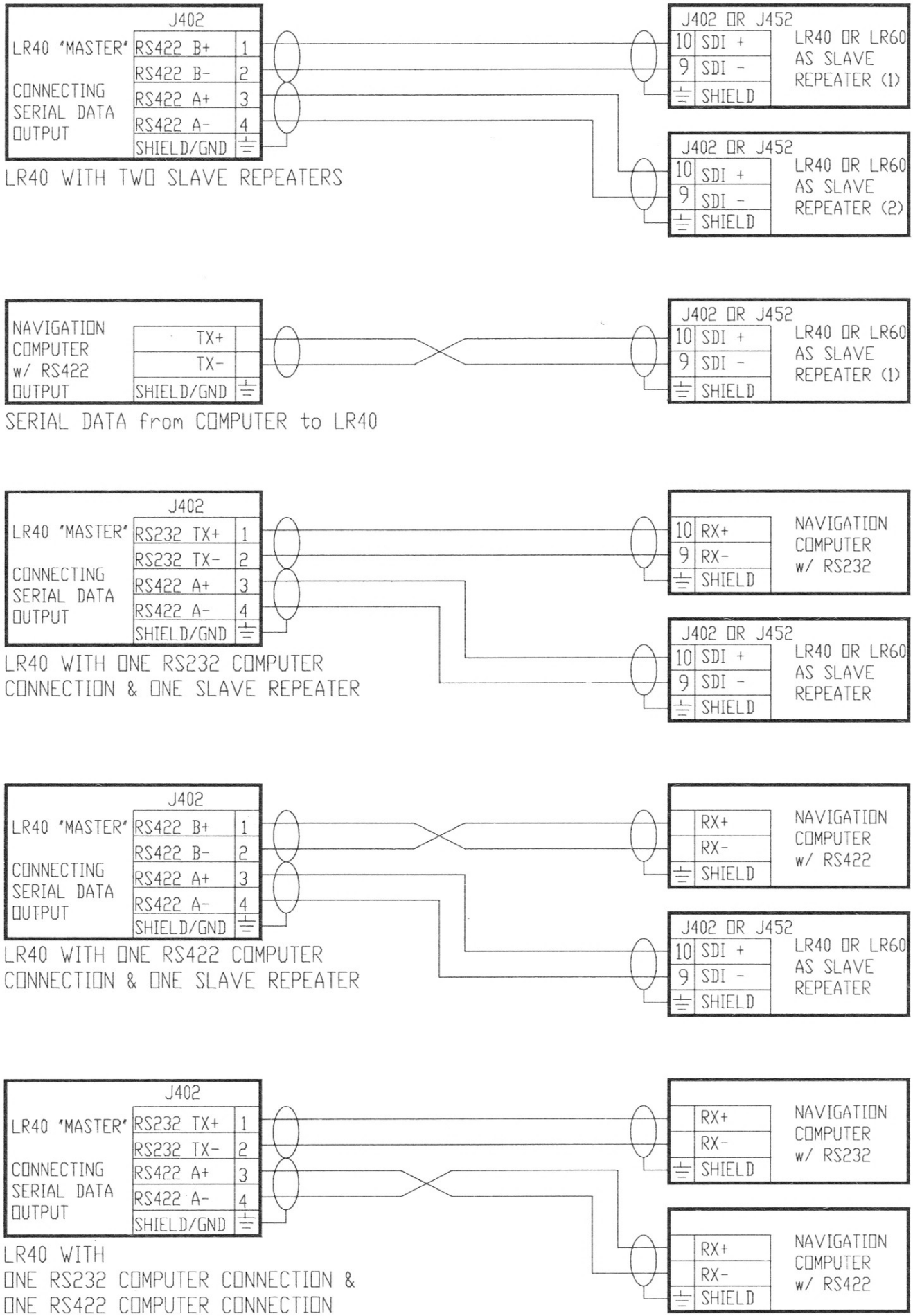

4.2. SETTING-UP PROCEDURE

Each repeater unit is supplied with a 1.5 meter long fly cord for mains supply. **Remember to program the MAINS INPUT -- J309, see Fig. 5.1.**

Cables for gyro information and serial data in/out **must be shielded cables.** For details see CABLE CONNECTIONS -- FIG. 4.9, TYPICAL CABLE PLAN -- FIG. 4.10 and TYPICAL SERIAL DATA CONNECTIONS -- FIG. 4.11.

4.2.1. PROGRAMMING PROCEDURE

See CHAPTER 5 for PROGRAMMING DETAILS!

A. Open the unit for "internal" programming. Unscrew the screws marked "B" in Fig. 4.7 and carefully pull out the Circuit Board Assembly. Carefully unplug the flat cable.

B. Program J309 for correct MAINS INPUT see Fig. 5.1.

C. Program the SERIAL DATA INPUT/OUTPUT BAUD RATE according to FIG. 5.2.

D. Program the SERIAL DATA OUTPUT for RS422 or RS232 according to FIG. 5.3.

E. Program the SERIAL DATA INPUT/OUTPUT DATA PROTOCOL according to FIG. 5.4.

F. DETERMINE the correct GYRO COMPASS MODEL, REFERENCE VOLTAGE and SIGNAL VOLTAGE and find the matching FIG. in CHAPTER 5 (Fig. 5.5 -- 5.20).

G. PROGRAM JUMPERS: J300, J301, J302, SYNC/STEP, J303, J307 & J308. and LK1 on the CONNECTOR PCB.

H. PROGRAM SW200 (-1,-2,-3).

I. You must **ALWAYS RESET** the LR40 before changes in SW200 programming takes effect. This can be done from the front panel by pressing all 3 buttons simultaneously or by disconnecting and reconnecting the POWER to the unit. After re-setting you must also cancel the alarm and re-adjust the Heading.

4.2.2. CABLE CONNECTING PROCEDURE

A. Unscrew the Terminal Assembly (screws marked "A" in Fig. 4.7) and carefully unplug the ribbon cable.

B. Prepare cable ends as shown in Fig. 4.8.

C. Enter cable(s) through cable gland(s) and tighten.

D. Connect earth lug(s) to Braid(s)/Screen(s) and fix to "earthing" screw.

E. Re-fix the Connector PCB.

F. Connect the wires according to the connection diagrams shown in Fig. 5.5 through Fig. 5.20 and as determined in SECTION 4.1.1 - 7. above.

G. **Make sure that you connect the gyro signals to J400! (and NOT to J402).**

H. Re-plug the ribbon cable and re-fit the Terminal Assembly.

USE the PROGRAMMING PROCEDURE described in section 4.2.1. and REMEMBER that you must always RESET the LR40 before changes in SW200 programming takes effect. This can be done from the front panel by pressing all 3 buttons simultaneously or by disconnecting and reconnecting the POWER to the unit.

5.1. PROGRAMMING OF MAINS INPUT

Figure 5.1 - MAINS PROGRAMMING

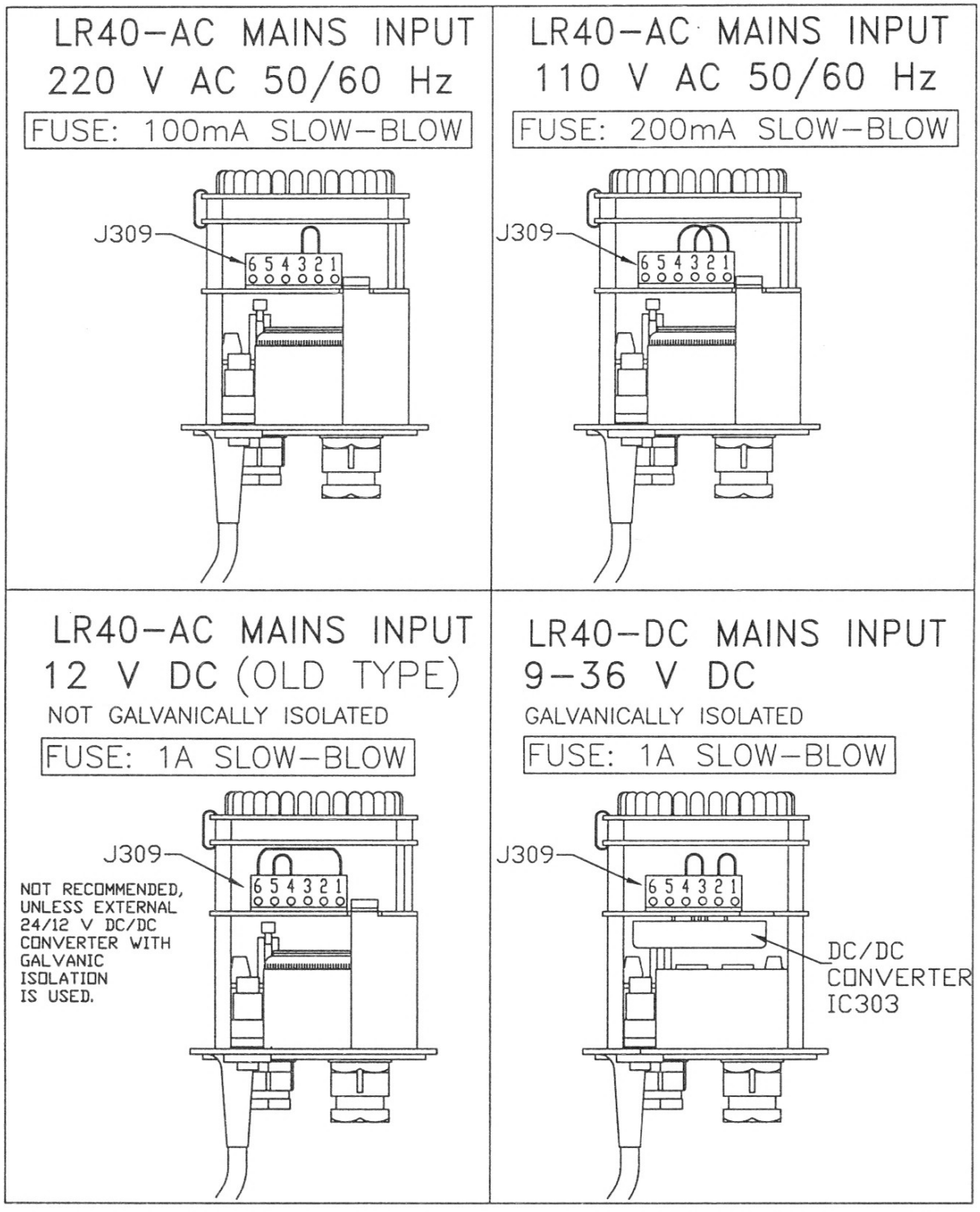

5.2. PROGRAMMING OF SERIAL SIGNAL

Figure 5.2 - PROGRAMMING of SERIAL DATA BAUD RATE

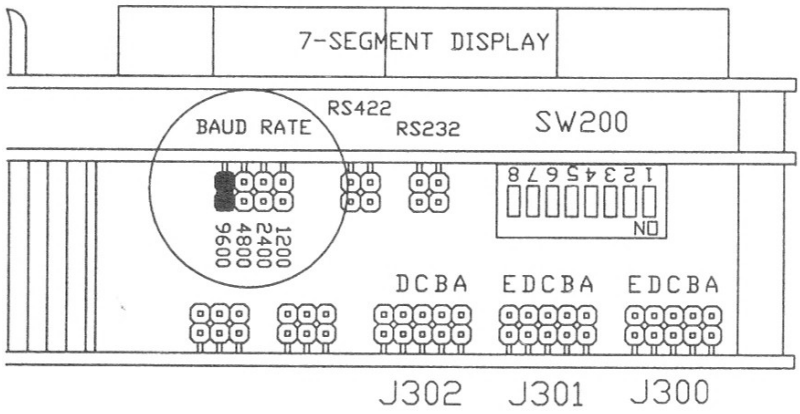

PROGRAMMING of SERIAL DATA BAUD RATE
(VALID BOTH for SERIAL DATA IN & SERIAL DATA OUT)

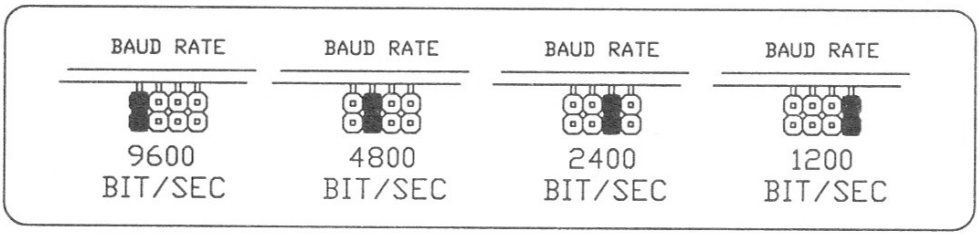

Figure 5.3 - SELECTING RS422 or RS232

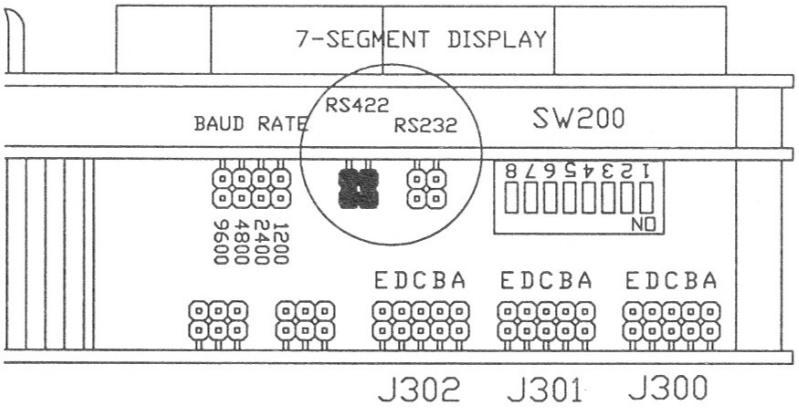

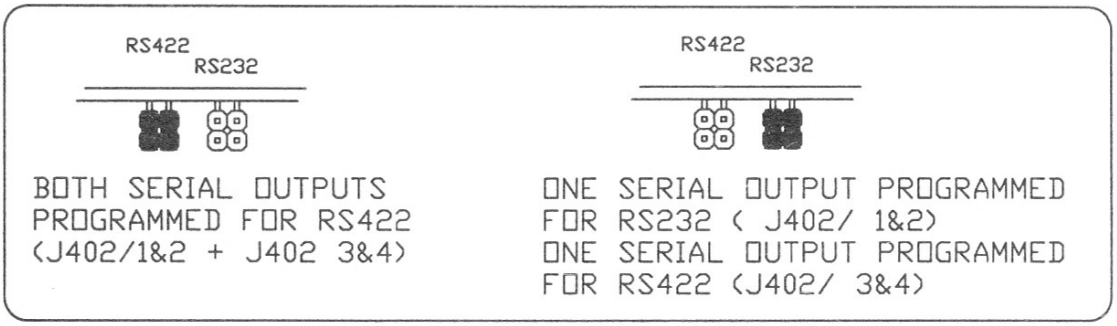

Figure 5.4 - PROGRAMMING OF SERIAL DATA PROTOCOLS

NOTE! Only valid with SOFTWARE VERSION v3.0 and higher

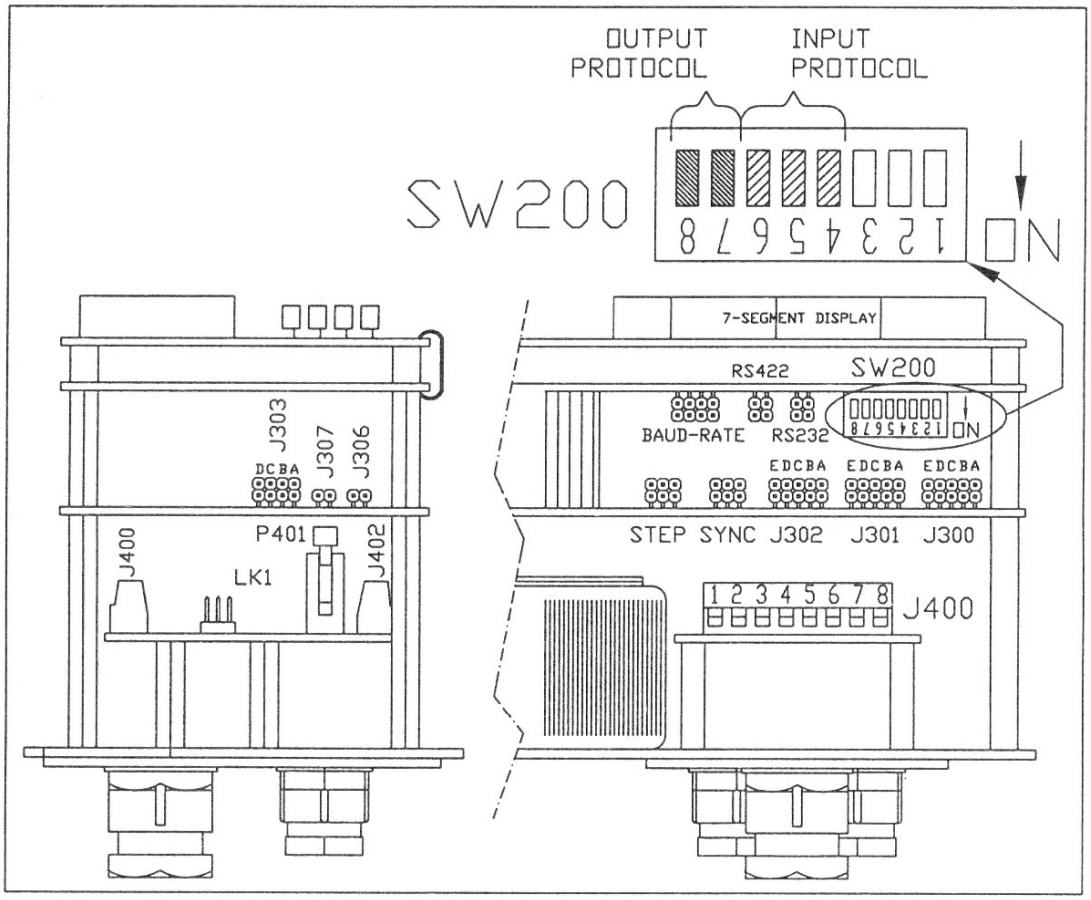

Serial Data Input and Output Protocols can be programmed separately and individually, thus allowing you to select any of four input protocols combine with any of four output protocols. Please note, however, that both the input and the output always will have the same baud rate. ***REMEMBER that you must always RESET the LR40 before changes in SW200 programming takes effect.***

INPUT PROTOCOL -- SELECTION TABLE

(Only valid with SOFTWARE VERSION v3.0 and higher)

INPUT PROTOCOL	**SW200 -**			OUTPUT PROTOCOL
(USE SW200 - 6, -5, -4)	4	5	6	(USE SW200 - 8, -7 BELOW)
NMEA 0183	OFF	OFF	OFF	SELECT <SW200 - 8, 7>
LR40/LR60	ON	OFF	OFF	SELECT <SW200 - 8, 7>
ROBERTSON RGC11	OFF	ON	OFF	SELECT <SW200 - 8, 7>
ANSCHÜTZ ST20	ON	ON	OFF	SELECT <SW200 - 8, 7>
(RESERVED)	OFF	OFF	ON	SELECT <SW200 - 8, 7>
(RESERVED)	ON	OFF	ON	SELECT <SW200 - 8, 7>
LR40/LR60 - NO ALARM BYTE	OFF	ON	ON	ANSCHÜTZ ST20
SPECIAL REQUEST	ON	ON	ON	SPECIAL REQUEST

OUTPUT PROTOCOL -- SELECTION TABLE

(Only valid with SOFTWARE VERSION v3.0 and higher)

OUTPUT PROTOCOL	**SW200 -**		
(USE SW200 - 8, -7)		7	8
NMEA 0183		OFF	OFF
LR40/LR60		ON	OFF
LR40/LR60 - NO ALARM BYTE		OFF	ON
ROBERTSON RGC11		ON	ON

5.3. GYRO COMPASS SELECTION -- CABLING & PROGRAMMING

REMEMBER to RESET the LR40 after you have changed the DIL switch setting -- otherwise the new programming will have no effect.

Figure 5.5 - STEP TTL LEVEL, NEG. REF.

MANUFACTURING COMPANY:	MODEL / TYPE:	STEP REF. VOLTAGE:	REF. VOLTAGE POLARITY:
		3,5 - 10V	NEGATIVE
			NEGATIVE

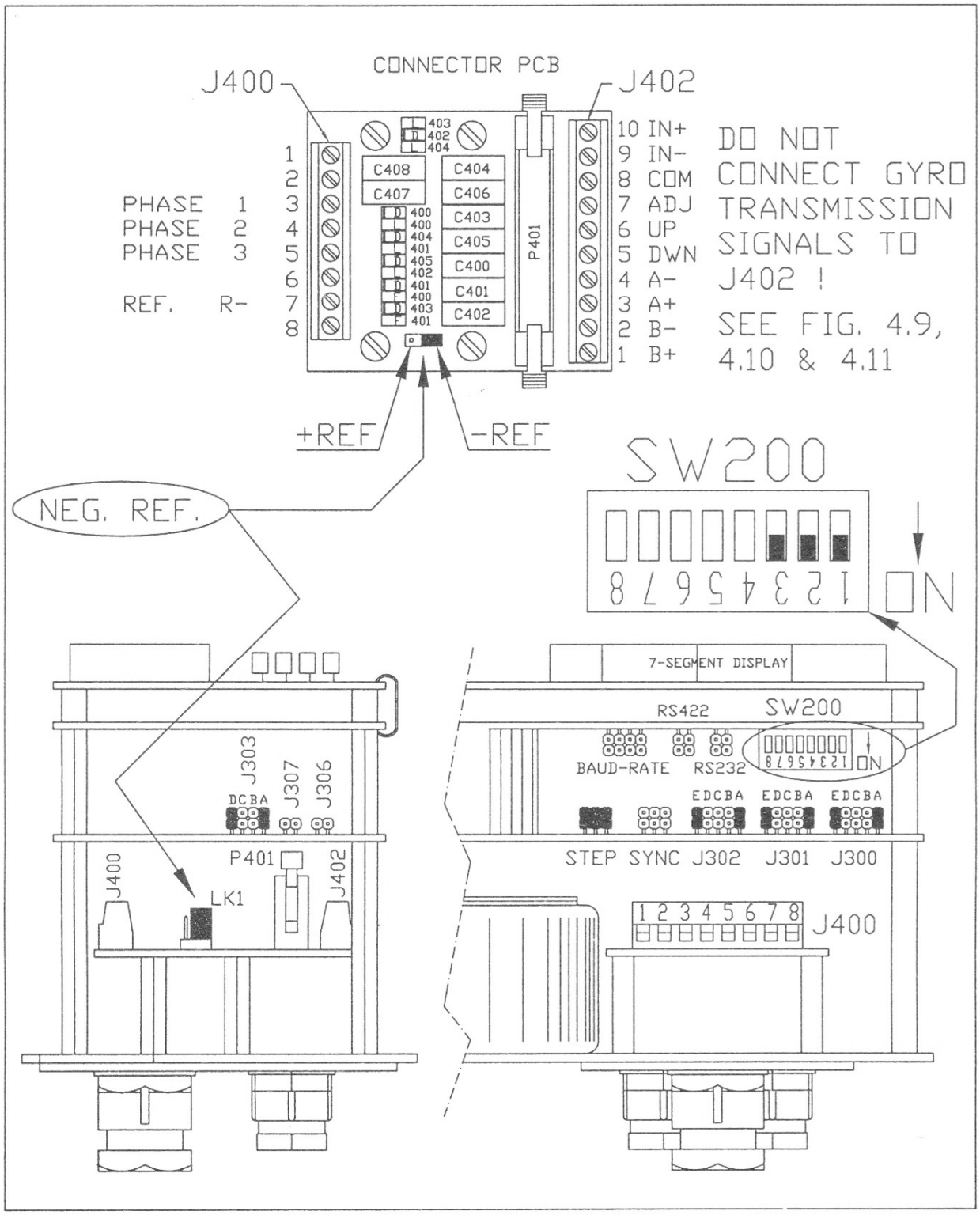

Figure 5.6 - STEP TTL LEVEL, POS. REF.

MANUFACTURING COMPANY:	MODEL / TYPE:	STEP REF. VOLTAGE:	REF. VOLTAGE POLARITY:
		3,5 - 10V	

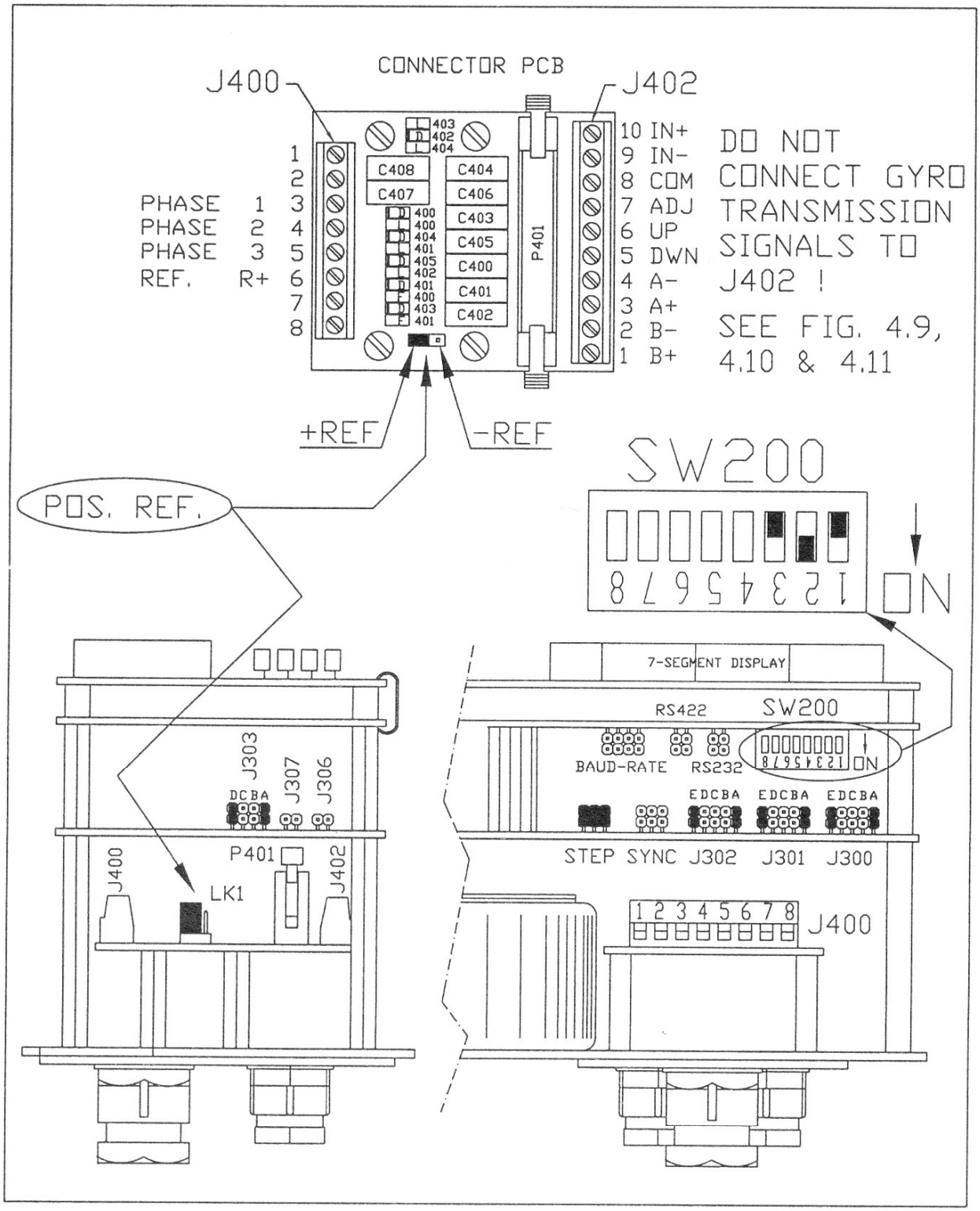

Figure 5.7 - STEP 24-35V UN-FILTERED, POS. REF.

MANUFACTURING COMPANY:	MODEL / TYPE:	STEP REF. VOLTAGE:	REF. VOLTAGE POLARITY:
S.G. BROWN	SGB1000	24V UN-FILTERED	POSITIVE
SPERRY	MK20, MK37 MOD- 0	24V UN-FILTERED	POSITIVE

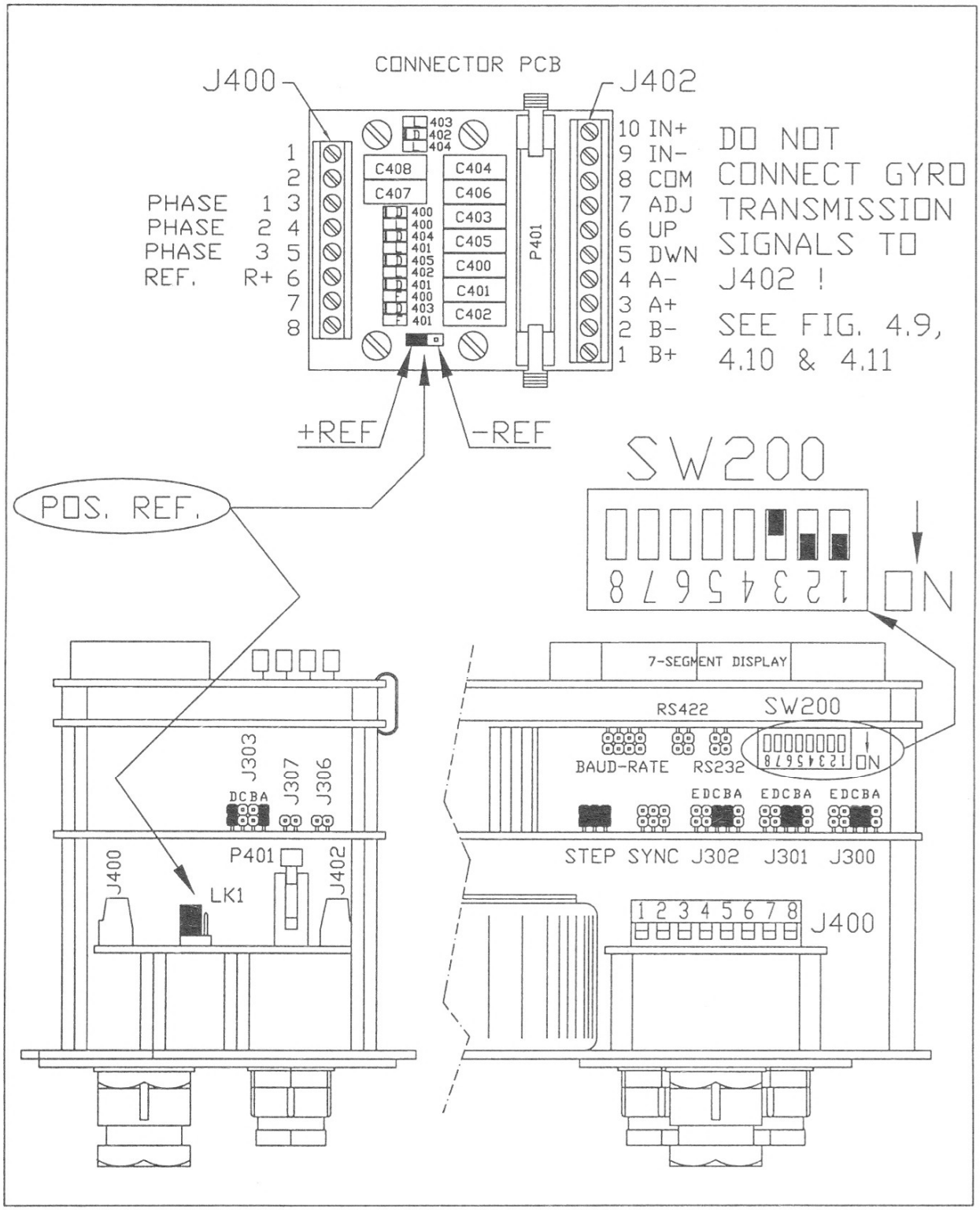

Figure 5.8 - STEP 24 - 35V DC, POS. REF.

MANUFACTURING COMPANY:	MODEL / TYPE:	STEP REF. VOLTAGE:	REF. VOLTAGE POLARITY:
S.G. BROWN	MK10	24V DC	POSITIVE
C. PLATH	NAVIGAT VII	24V or 35V DC	POSITIVE
RACAL DECCA	RDMK7	24V or 35V DC	POSITIVE
ROBERTSON	RPG90	24V or 35V DC	POSITIVE
SPERRY	SR120, SR220, MK37 MODEL D or E	35V DC	POSITIVE
TOKIMEK	TG3000, TG5000	35V DC	POSITIVE

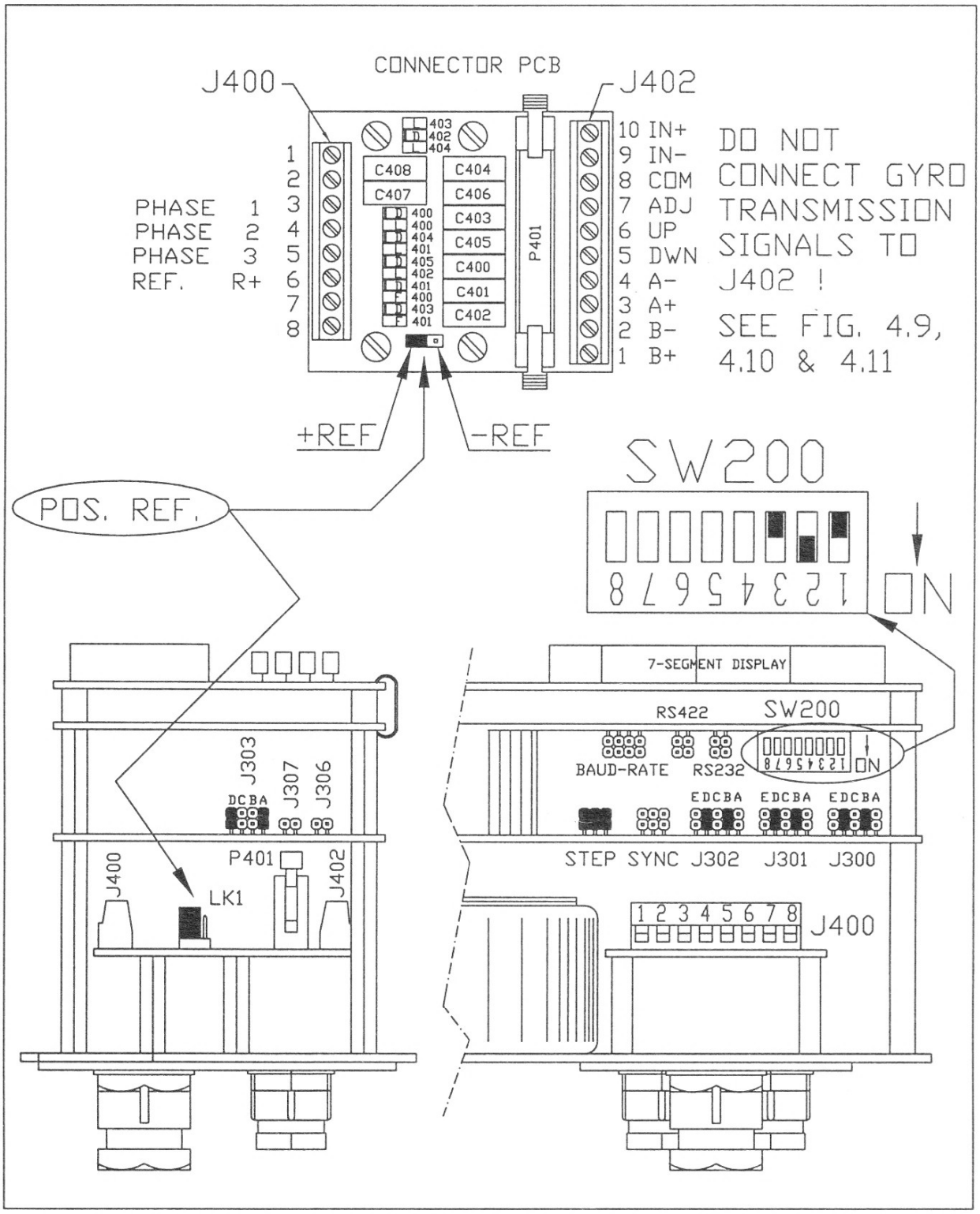

Figure 5.9 - STEP 24 - 35V DC, NEG. REF.

MANUFACTURING COMPANY:	MODEL / TYPE:	STEP REF. VOLTAGE:	REF. VOLTAGE POLARITY:
		24 or 35V DC	NEGATIVE
		24 or 35V DC	NEGATIVE

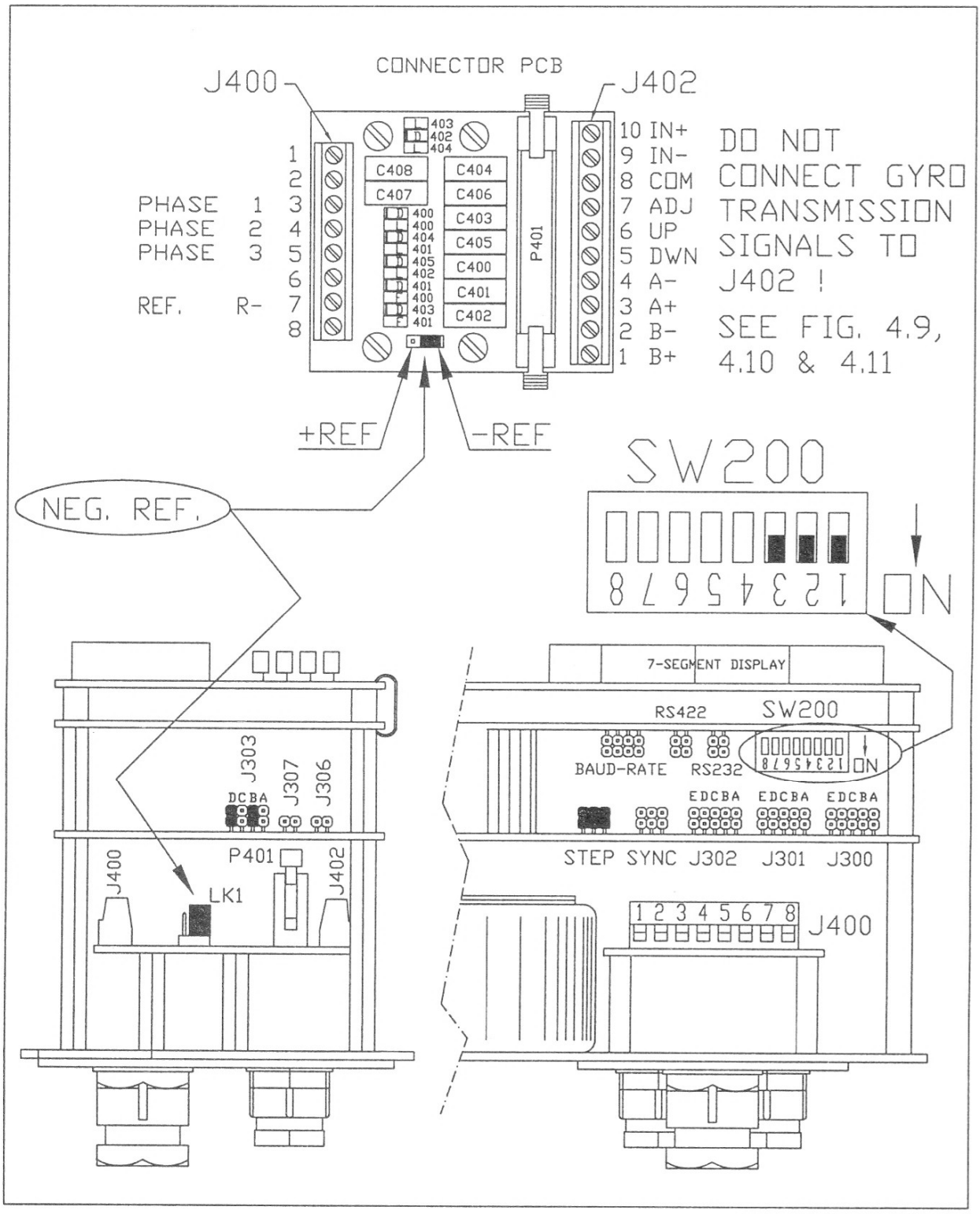

Figure 5.10 - STEP 35V UN-FILTERED, POS. REF.

MANUFACTURING COMPANY:	MODEL / TYPE:	STEP REF. VOLTAGE:	REF. VOLTAGE POLARITY:
S.G. BROWN	SGB1000	35V UN-FILTERED	POSITIVE
SPERRY	MK20, MK37 MOD- 0	35V UN-FILTERED	POSITIVE

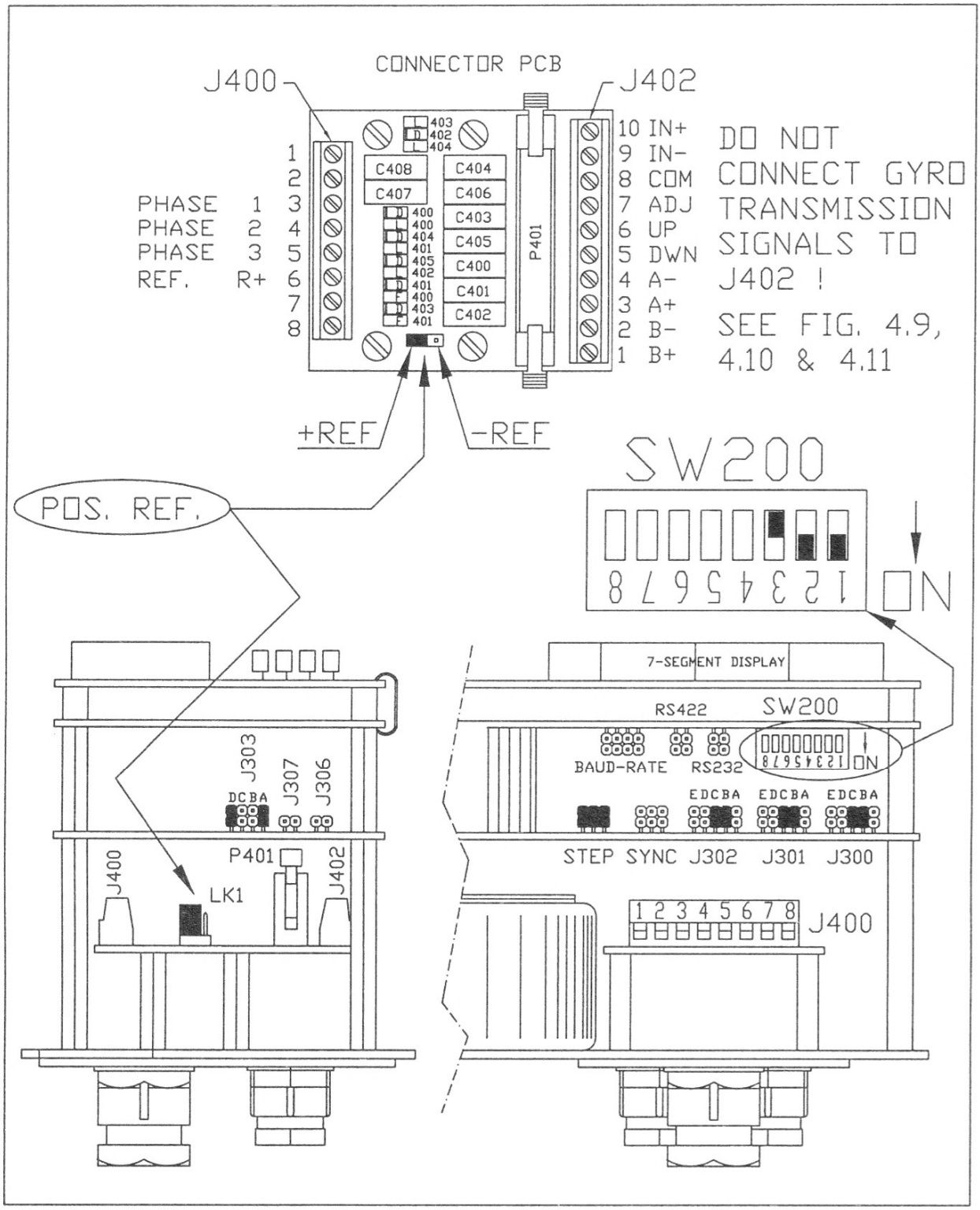

Figure 5.11 - STEP 50 -70V DC, POS. REF.

MANUFACTURING COMPANY:	MODEL / TYPE:	STEP REF. VOLTAGE:	REF. VOLTAGE POLARITY:
S.G. BROWN	MK10	50V DC	POSITIVE
C. PLATH	NAVIGAT VII	50V or 70V DC	POSITIVE
RACAL DECCA	RDMK7	50V or 70V DC	POSITIVE
ROBERTSON	RPG90	50V or 70V DC	POSITIVE
SPERRY	SR120, SR220, MK37 MODEL D or E	50V or 70V DC	POSITIVE
TOKIMEK	TG3000, TG5000	70V DC	POSITIVE

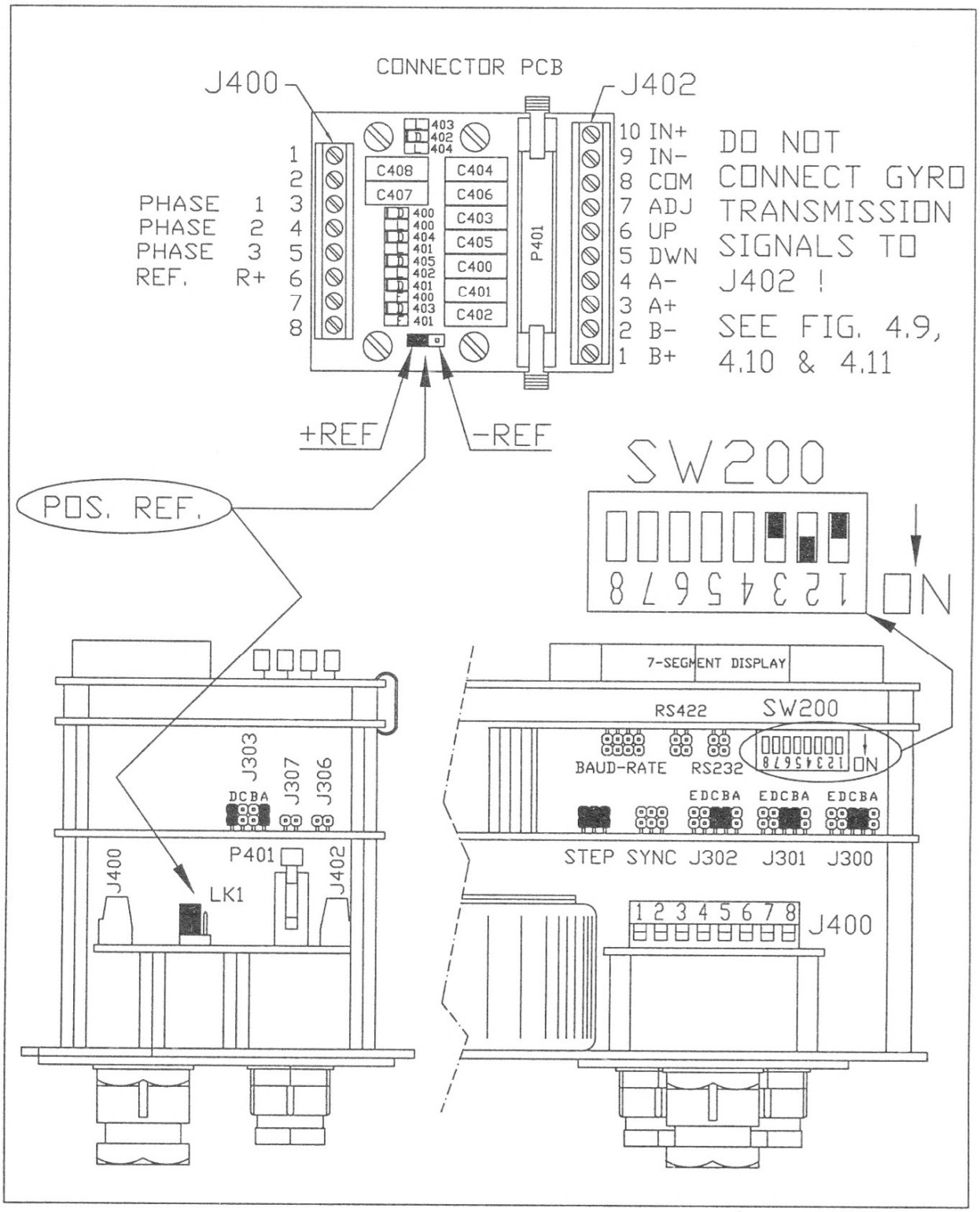

Figure 5.12 - STEP 50 -70V DC, NEG. REF.

MANUFACTURING COMPANY:	MODEL / TYPE:	STEP REF. VOLTAGE:	REF. VOLTAGE POLARITY:
SPERRY	MK227	70V DC NEG REF.	NEGATIVE

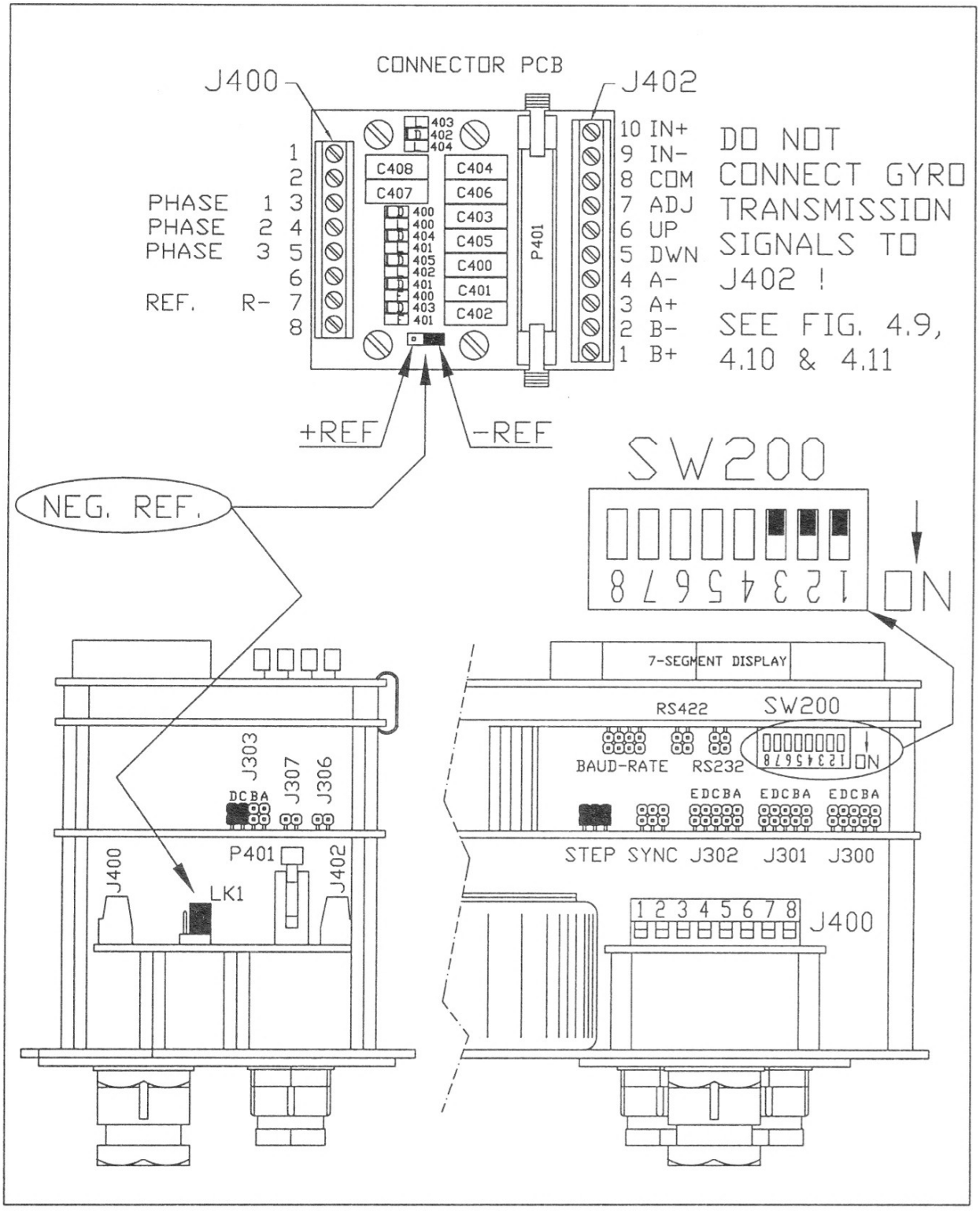

Figure 5.13 - STEP 50 -70V UN-FILTERED, POS. REF.

MANUFACTURING COMPANY:	MODEL / TYPE:	STEP REF. VOLTAGE:	REF. VOLTAGE POLARITY:
S.G. BROWN	SGB1000	70V UN-FILTERED	POSITIVE
SPERRY	MK20, MK37 MOD-1	70V UN-FILTERED	POSITIVE

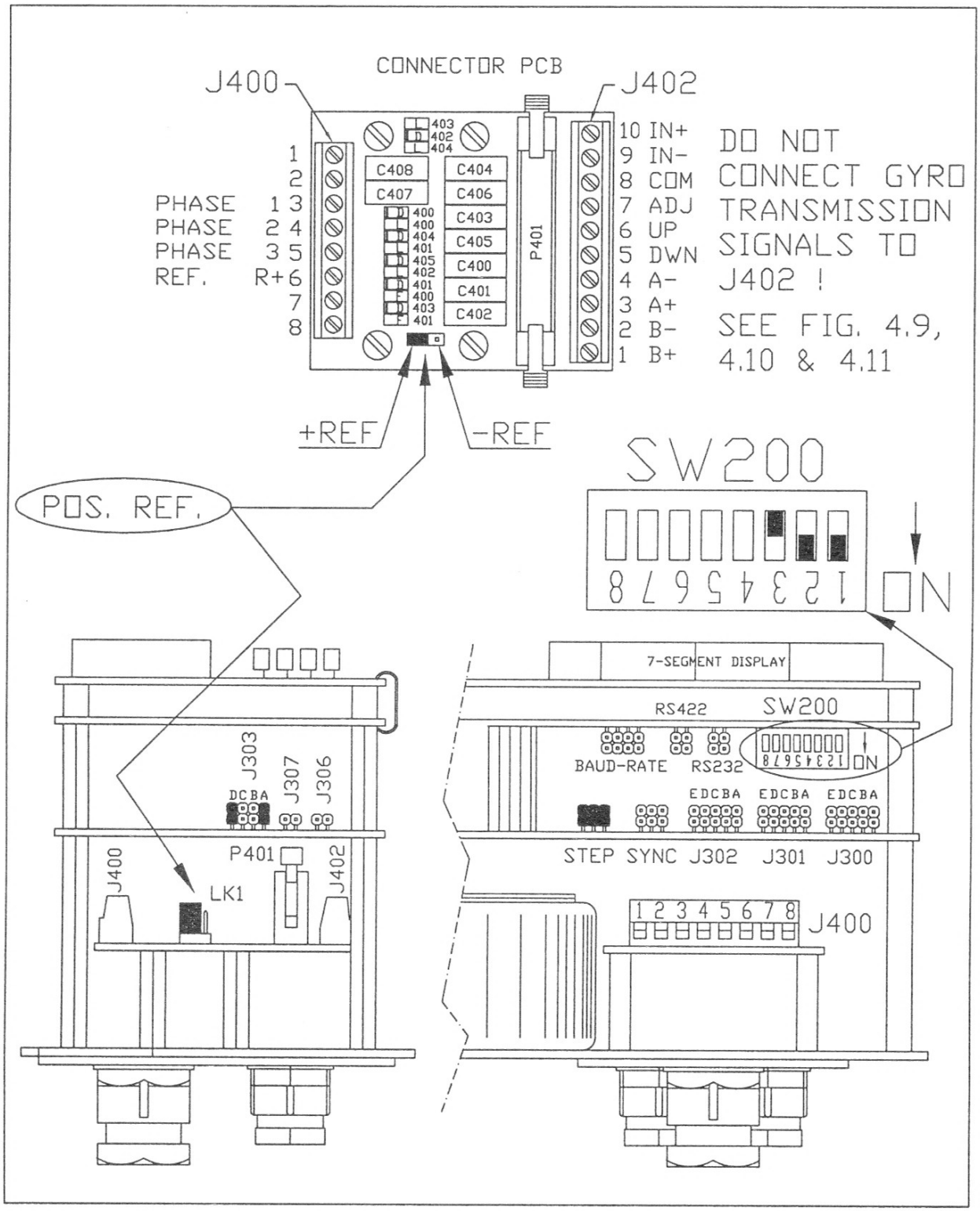

Figure 5.14 - STEP 100V DC, POS. REF.

MANUFACTURING COMPANY:	MODEL / TYPE:	STEP REF. VOLTAGE:	REF. VOLTAGE POLARITY:
FURUNO	GY700	100V DC	POSITIVE

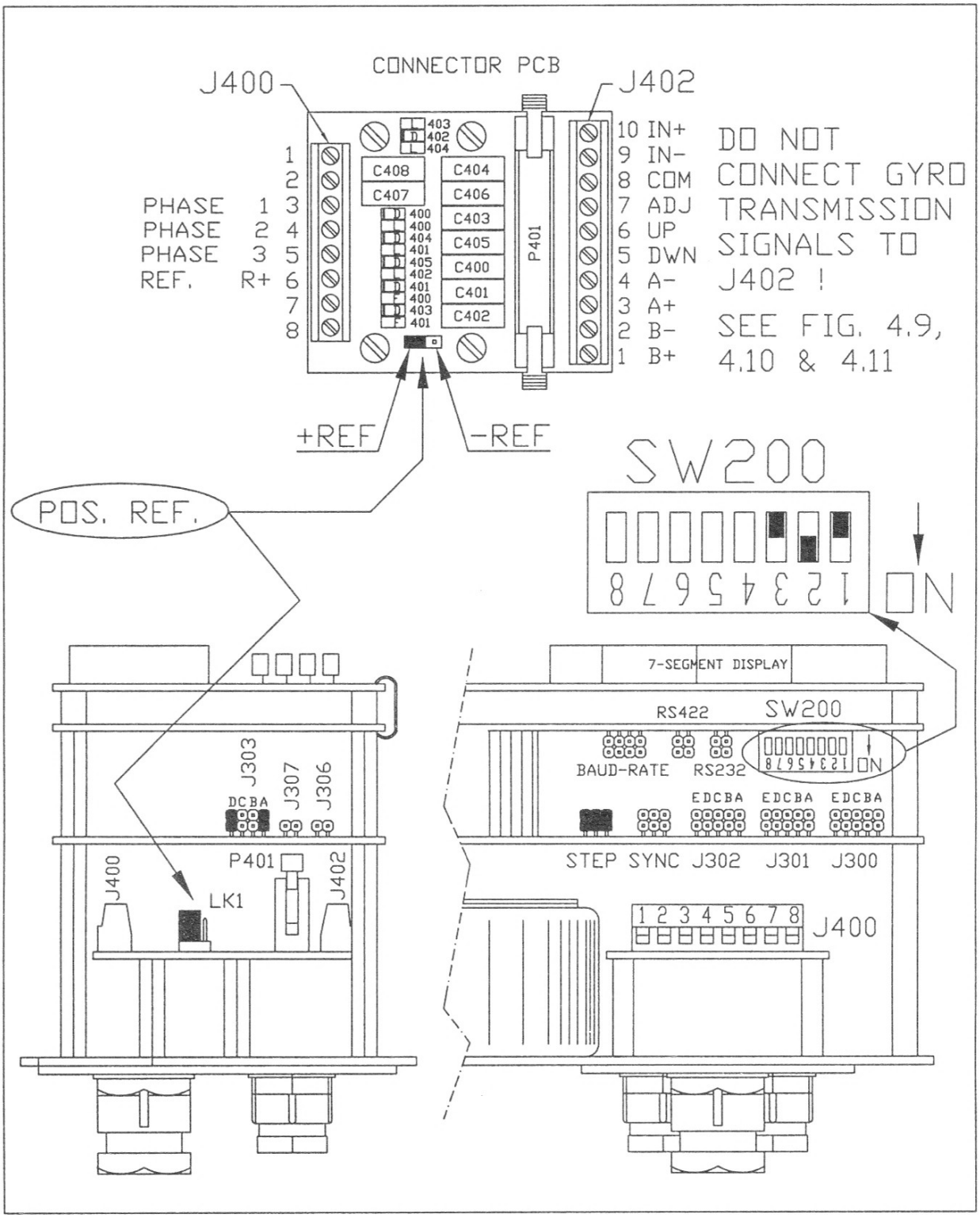

Figure 5.15 - SPERRY & TOKIMEK INDUCTIVE TRANSMISSION SIGNAL

MANUFACTURING COMPANY:	MODEL / TYPE:	LINE VOLTAGE:	REF. VOLTAGE:
SPERRY	SR100 / SR120 / SR200		400 Hz AC
TOKIMEK	TG100		400 Hz AC

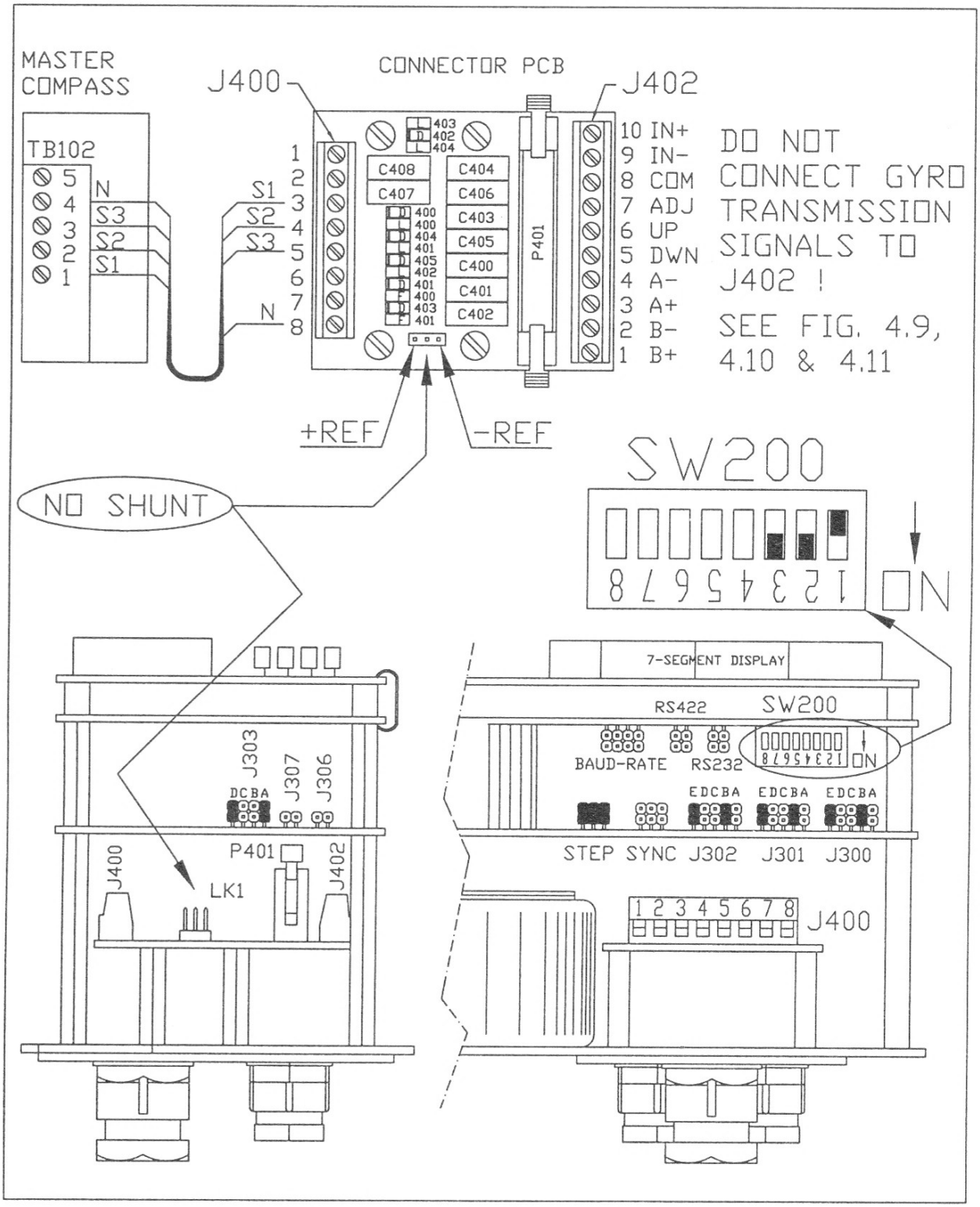

Figure 5.16 - ANSCHÜTZ MICRO STEP

MANUFACTURING COMPANY:	MODEL / TYPE:	STEP REF. VOLTAGE	REF. VOLTAGE POLARITY
ANSCHÜTZ	ST14 - GYROSTAR	24V DC	0V COMMON

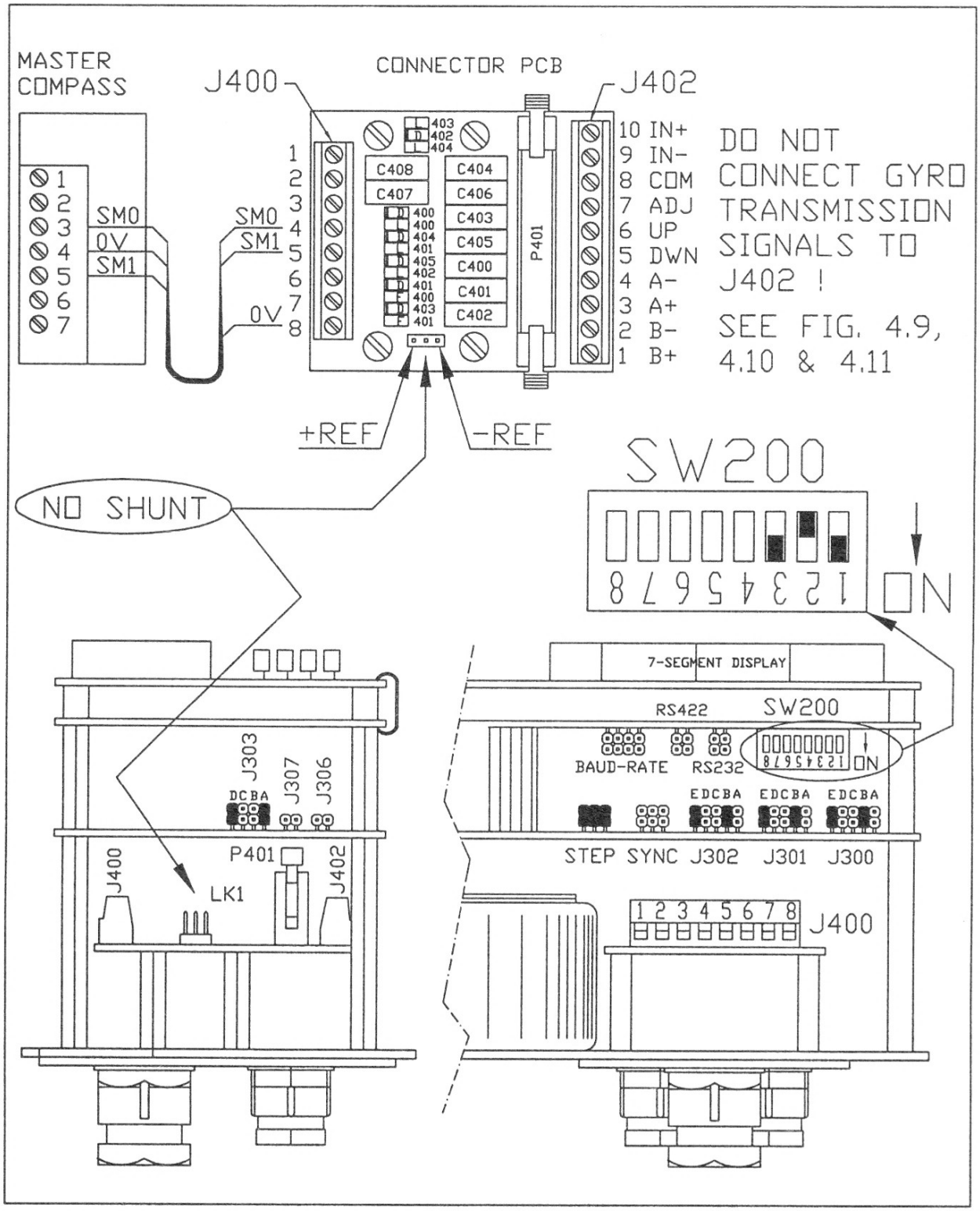

Figure 5.17 - SYNCHRO 360:1 SIGNALS - TYPE A (50-60 Hz AC)

MANUFACTURING COMPANY:	MODEL / TYPE:	PHASE VOLTAGE 50-60 Hz	REF. VOLTAGE 50-60 Hz
ANSCHÜTZ	STD: 4, 6, 12 ,14+, 20	20-24 V AC	50-60 V AC

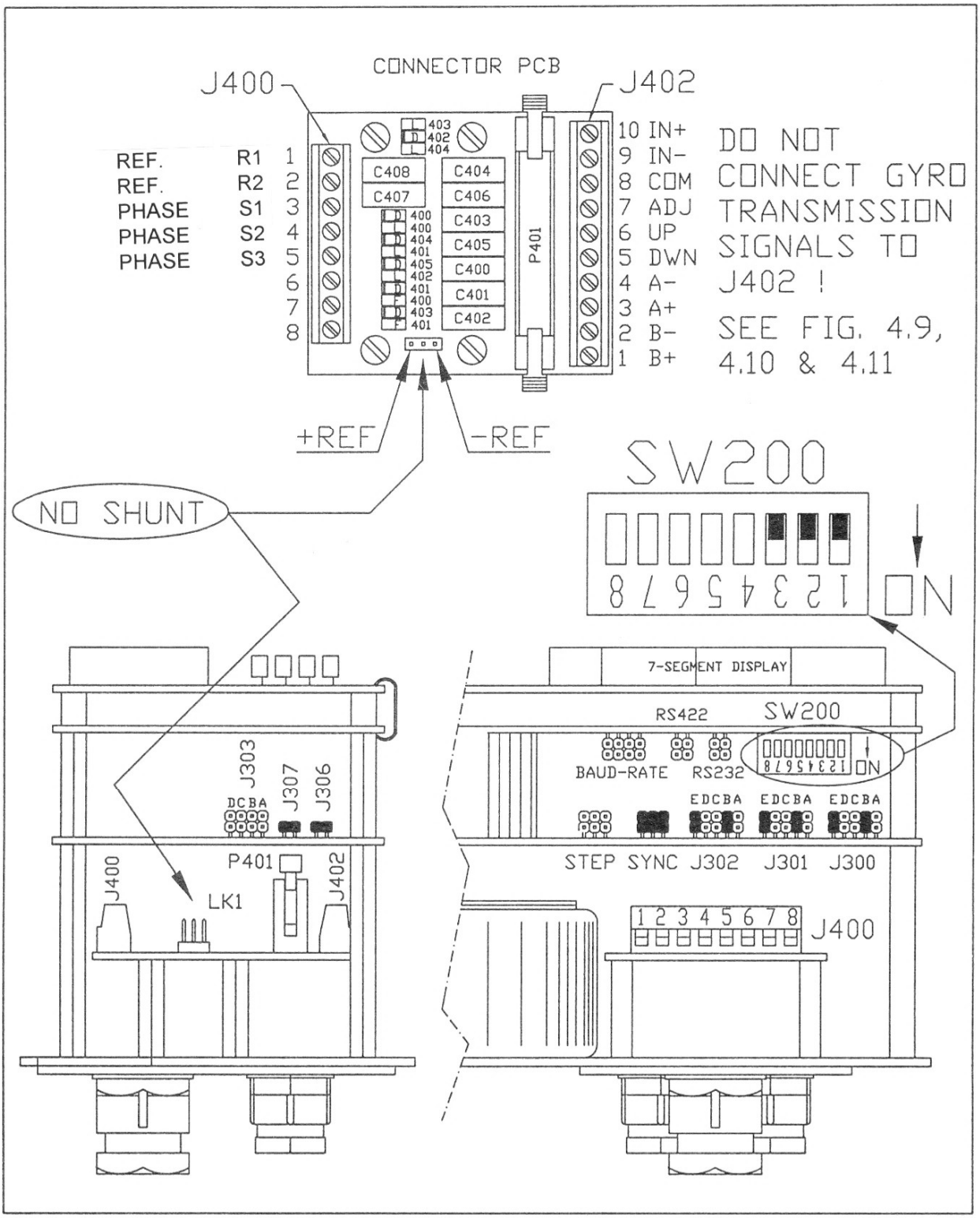

Figure 5.18 - SYNCHRO 360:1 SIGNALS - TYPE B (50-60 Hz AC)

MANUFACTURING COMPANY:	MODEL / TYPE:	PHASE VOLTAGE 50-60 Hz	REF. VOLTAGE 50-60 Hz
C. PLATH	NAVIGAT II, III	68-90 V AC	50-60 V AC
HOKUSHIN / YOKOGAWA	C1, C2, C3	68-90 V AC	50-60 V AC

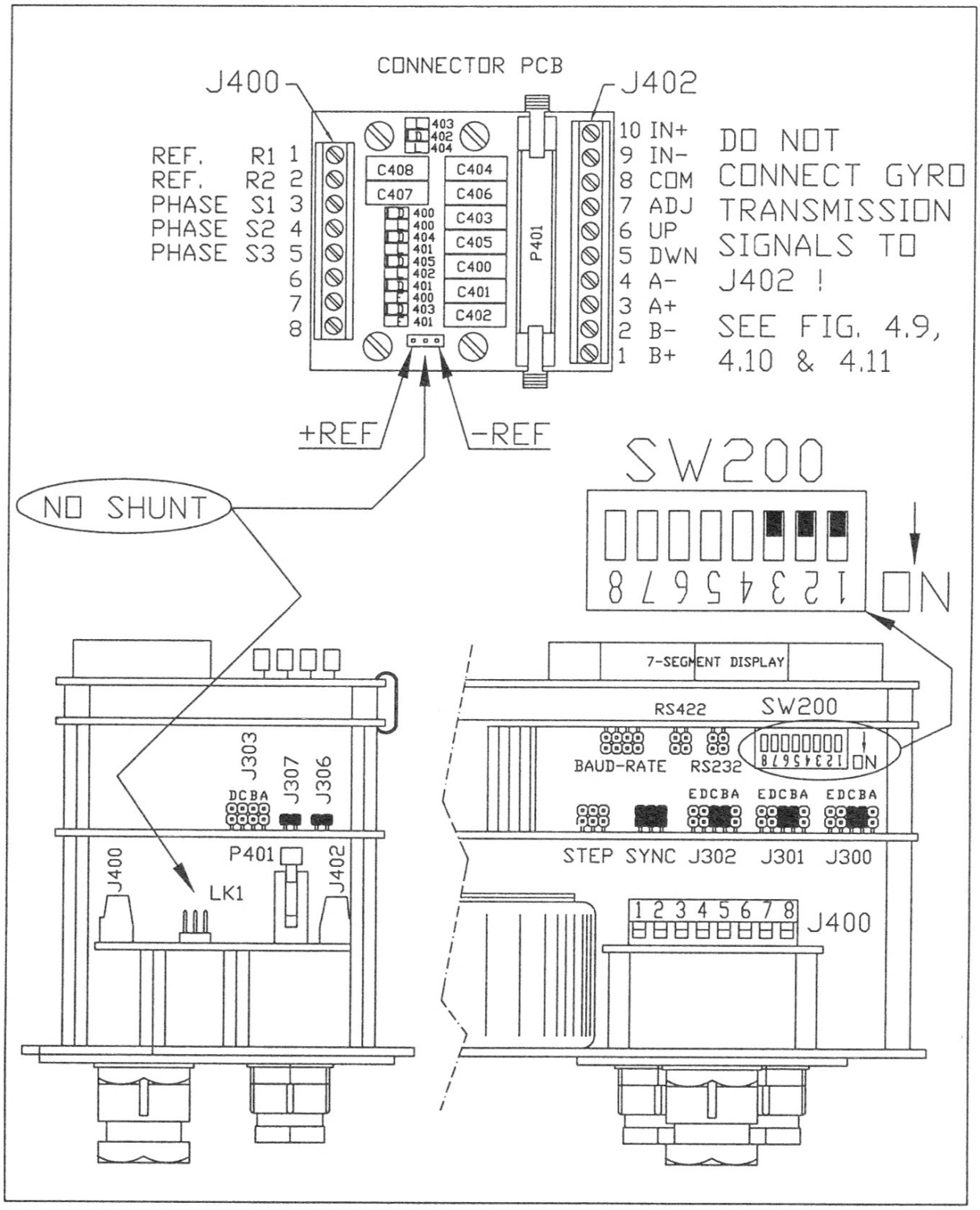

Figure 5.19 - SYNCHRO 360:1 SIGNALS - TYPE C (50-60 Hz AC)

MANUFACTURING COMPANY:	MODEL / TYPE:	PHASE VOLTAGE 50-60 Hz	REF. VOLTAGE 50-60 Hz
HOKUSHIN / YOKOGAWA	CMZ102,CMZ200, CMZ200A, CMZ300 w/ CONTOL BOX KC305	68-90 V AC	110-115 V AC
MICROTECNICA	MB12, MB19	68-90 V AC	110-115 V AC

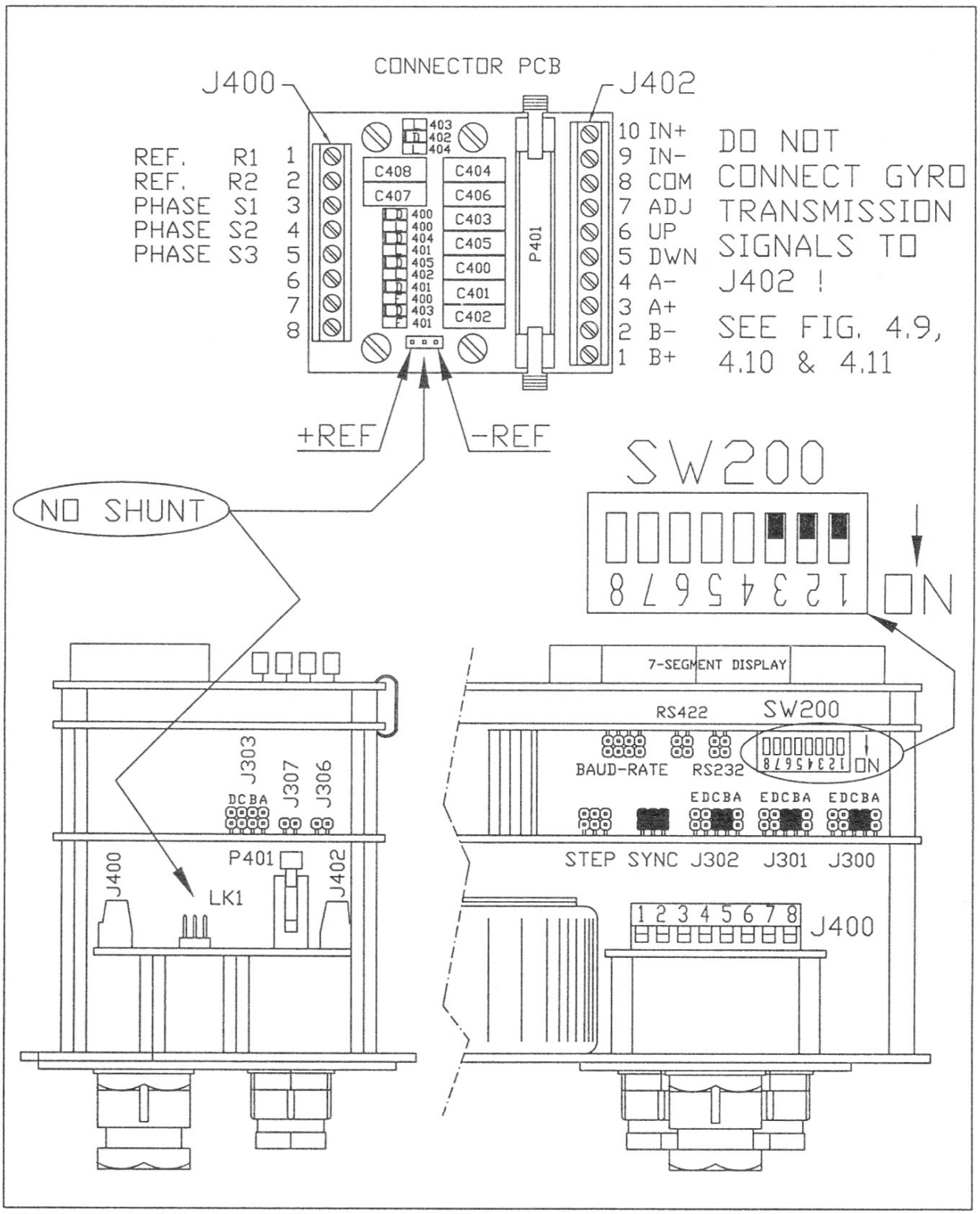

Figure 5.20 - SYNCHRO 360:1 SIGNALS - TYPE D1 (DC)

MANUFACTURING COMPANY:	MODEL / TYPE:	PHASE VOLTAGE DC	REF. VOLTAGE
MICROTECNICA	MB20 POLARIS w/ CONTROL UNIT 1	+/- 18V DC	24 V DC -- NOT CONNECTED

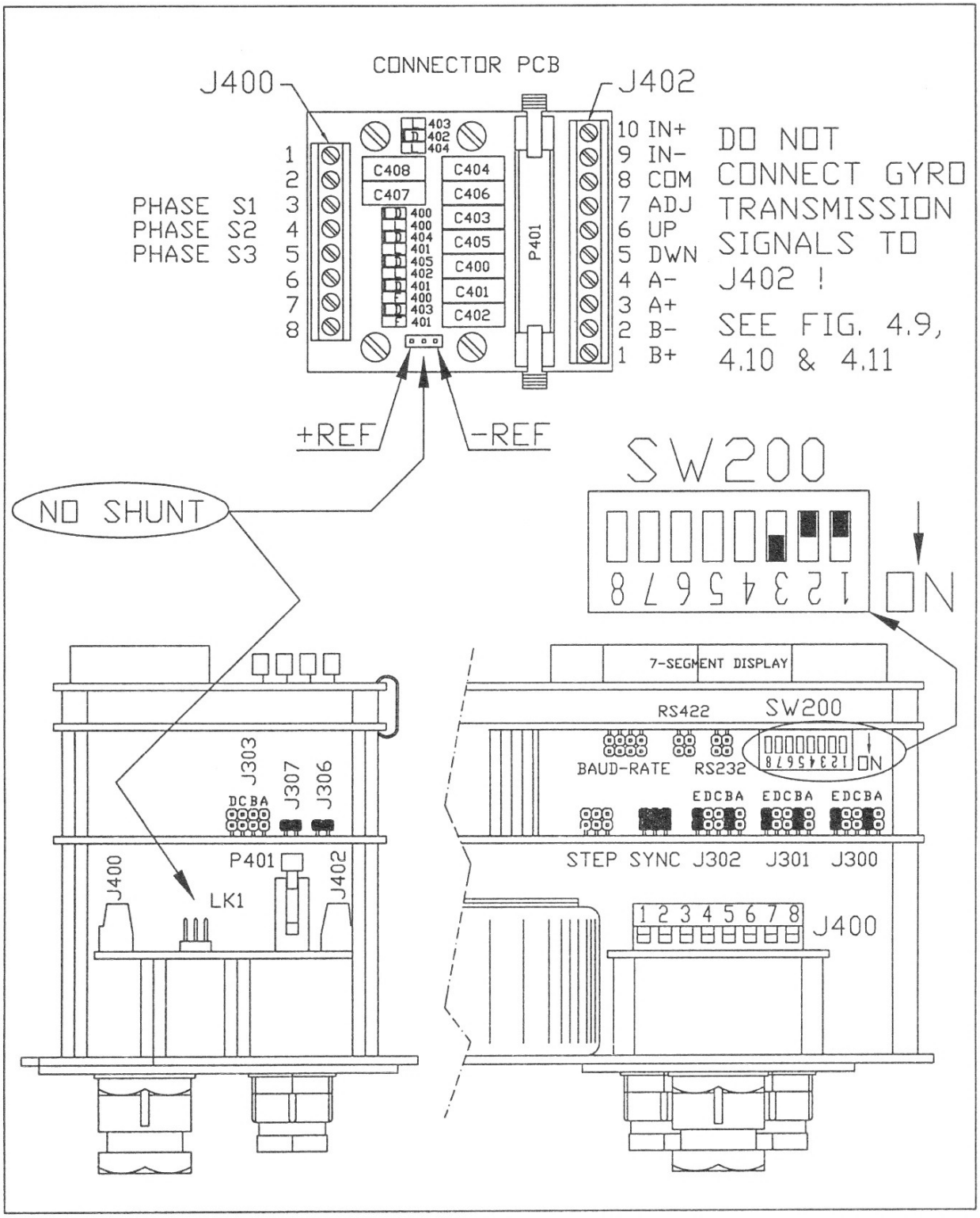

Figure 5.21 - SYNCHRO 360:1 SIGNALS - TYPE D2 (DC)

MANUFACTURING COMPANY:	MODEL / TYPE:	PHASE VOLTAGE DC	REF. VOLTAGE
YOKOGAWA	CMZ300X, CMZ250X w/CONTROL BOX KC307 / KC307A	+/- 35V DC	12 V DC -- NOT CONNECTED

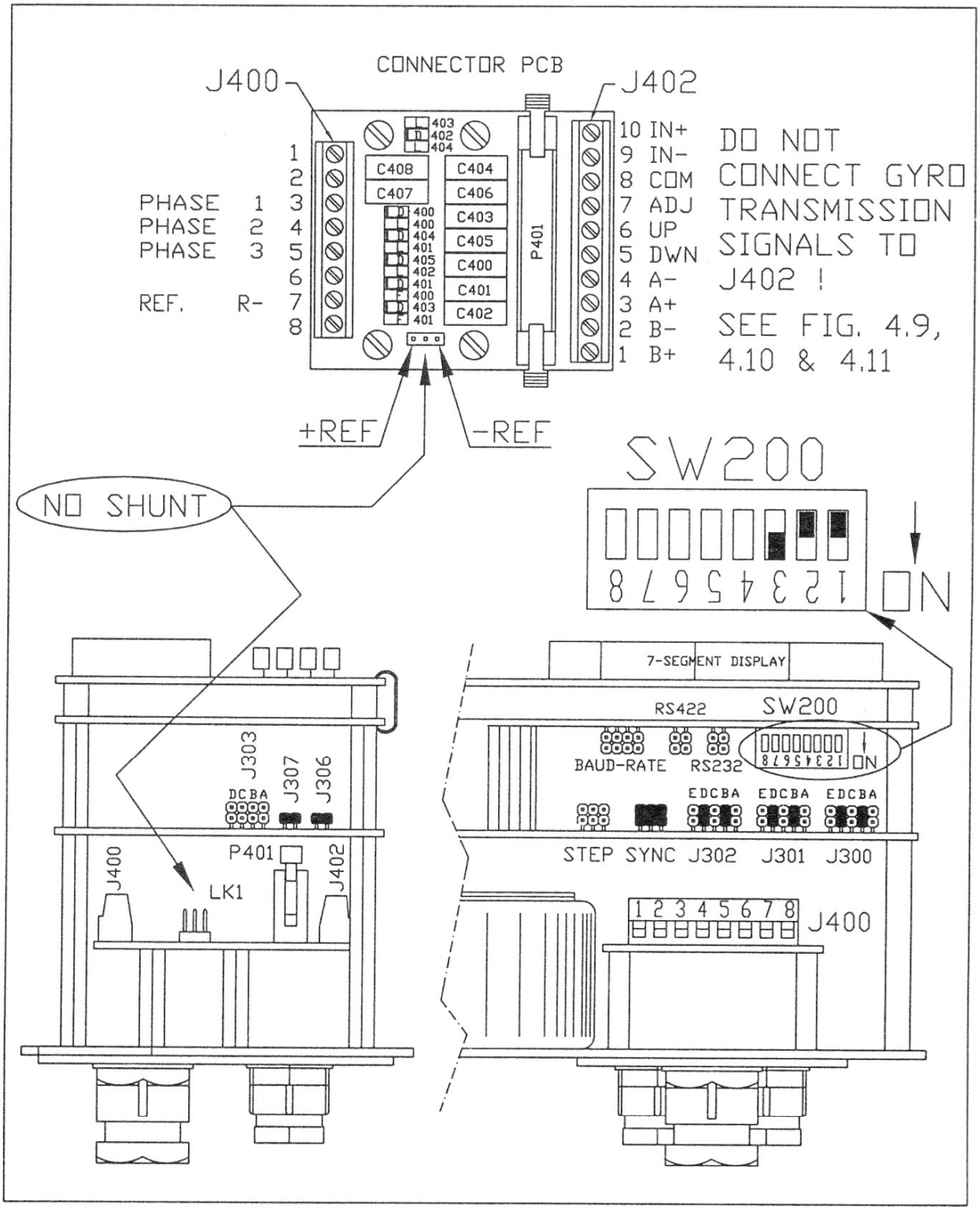

6. CHAPTER SIX - TROUBLE SHOOTING

When the unit starts flashing - indicating an alarm - you should press and hold the "Center" button on the front panel for at least 5 sec. and then read the number shown on the display. The number that appears is an "ALARM CODE" indicating the cause of the alarm.

It is **important** that you do not touch any of the other front panel buttons before you press the middle button - if you do you might cancel the alarm!

NOTE ! It is very **important** that the unit is correctly installed and that the various Programming Jumpers and SW200 are correctly programmed, if not, any of the alarm functions described below could become activated. Therefore if the unit starts flashing - please check the connections and the programming (see chapters 4, 5 and 6).

In the sections below you will find a description of each of the alarm codes, together with an explanation of the possible alarm causes.

NOTE ! It is possible to have two or more alarms at the same time - in which case two or more alarm codes will combine. In the last section below some of these "combined" alarm codes are described.

6.1. ALARM CODE 020.0 = INCORRECT SIGNAL FROM MASTER REPEATER

When LR40 is run as **SLAVE** repeater and there is an "**OVER-RUN-FRAMING-ERROR**" in the serial transmission, the **020.0** alarm code will appear when you press and hold center button for at least 5 sec.

This error can be caused by wrong baud rate setting, start/stop and parity bit error and in general by a bad connection or swapped connection leads.

6.2. ALARM CODE 040.0 = INTERNAL SOFTWARE FAULT

This error should not normally occur in a production unit. The error is caused by internal software "over-run". A faulty EEPROM could produce this error.

6.3. ALARM CODE 080.0 = ERRATIC SIGNAL FROM GYRO

An error has been detected when decoding the gyro transmission signals.
For LR40 this error signal indicates that the signals from the gyro do not change in an orderly fashion. The error could be caused by an intermediate loss of signal information or as a result of extremely rapid or erratic changes in the gyro signals. This alarm will occur when the LR40 decoding procedure finds a missing "step" in the step-by-step sequence.

6.4. ALARM CODE 100.0 = ALARM IN MASTER

When LR40 is operating in **SLAVE** mode (see section 3.3.1.) **AND** there is an alarm status in the "MASTER" repeater, the **100.0** alarm code will appear when you press and hold center button for at least 5 sec.

When LR40 is operating in "MASTER" mode (see section 3.3.1.) AND the unit starts to flash an alarm, the ALARM STATUS BYTE transmitted on serial line will be CA_H instead of $C0_H$. The SLAVE repeater will decode this alarm status byte and start an alarm in the slave repeater as well.

6.5. ALARM CODE 200.0 = SERIAL SIGNAL MISSING

When LR40 is operating in **SLAVE** mode **AND** no serial signal has been received for the last second, this alarm will start. The **200.0** alarm code will appear when you press and hold the center button for at least 5 sec.

The most likely error to cause this alarm is a faulty serial signal connection.

6.6. ALARM CODE 400.0 = SIGNALS FROM GYRO MISSING

This alarm will appear if the one or more of the PHASE signals or the REF. signal is missing or open circuited. If you can verify that the signals going into the LR40 is changing properly, it is likely that the error can be found on the Connector PCB (F400 / F401) or on the Interface PCB.

6.7. ALARM CODE 800.0 = POWER ON ALARM / LOW LINE VOLTAGE ALARM

This alarm will appear whenever the POWER to the unit is turned on or comes back on after a "dip" ("brown-out" or "black-out"). The reason for this alarm is to eliminate any errors in the heading that might occur should the heading change during a "power dip".

6.8. COMBINED ALARM CODES

Possible alarm code combinations:

C00.0 which could be a combination of **800.0** + **400.0**

880.0 which could be a combination of **800.0** + **080.0**

A00.0 which could be a combination of **800.0** + **200.0**

900.0 which could be a combination of **800.0** + **100.0**

7.1. PARTS LISTS

7.1.1. PARTS LIST for LR40 CABINET (AC & DC) -- V1.2

PARTS MARKED with * = NOT MOUNTED in -AC version
PARTS MARKED with ** = NOT MOUNTED in -DC version

Pos No	Qty	Old Prt. No.	ORDER Part No.	DESCRIPTION	APPLICATION (Drawing Ref)
1	1	SR3207	ASS_PCB_01020	PCB - 3 BOARD ASSEMBLY w/COMPONENTS	100s = DISPLAY 200s = COMPUTER 300s = INTERFACE
2	1	SR4163	ASS_PCB_01021	PCB - CONNECTOR w/COMPONENTS	400s = CONNECTOR
3	1		PRT_DOC_10004	INSTRUCTION MANUAL for LR40	
4	1	417564	PRT_PCK_10001	CARDBOARD BOX for LR40	
5	2	417563	PRT_PCK_10002	MONOPLAST CASSETTE for LR40	
6	1	LS3534	PRT_MEK_10002	REAR COVER for LR40	0.1
7	2	LS4214	PRT_MEK_10008	FRICTION WASHER for LR40	0.9.3, 0.9.6
8	1	LS4180	PRT_MEK_10017	TERMINAL ASSEMBLY for LR40	0.2
**9	1	LS4182	PRT_MEK_10022	HEATSINK for LR40	4.5
10	2	LS4181	PRT_MEK_10005	PANEL MOUNT BRACKET for LR40	PANEL MOUNT KIT
11	2	LS4212	PRT_MEK_10023	KNURLED NUT for LR40	PANEL MOUNT KIT
11b	2	LS4212	PRT_MEK_10024	AMERICAN WING NUT M3	PANEL MOUNT KIT
12	1	417542	ASS_MEK_01003	FRONT PANEL ASSEMBLY Complete W / Buttons, Cable, Plug and Acrylic Filter	0.7
13	2	SR3142	PRT_MEK_10003	SIDE COVER for LR40, RAL 7001	0.3, 0.6
14	2	LS3536	PRT_MEK_10001	TOP&BOTTOM COVER for LR40, RAL 7001	0.4, 0.5
15	1	LS3535	PRT_MEK_10004	CRADLE for LR40, RAL 7001	0.9
16	2	44462	PRT_SCR_10002	SCREW M3*25S DIN84	22.3, 23.3
17	4	44464	PRT_SCR_10003	SCREW M3*45S DIN84	1.1, 2.1, 3.1, 4.1
18	18	40035	PRT_SCR_10001	SCREW M3*8S DIN84	1.7, 2.7, 3.7, 4.7, 5.1, 5.7, 10.3, 11.3, 12.3, 13.3, 14.1, 14.5, 15.1, 15.5, 16.1, 16.5, 17.1, 17.5
19	1	40053	PRT_SCR_10004	SCREW M4*10S DIN84	9.5
20	1	40055	PRT_SCR_10005	SCREW M4*14S DIN84	21.6
**21	1	40061	PRT_SCR_10006	SCREW M4*40S DIN84	6.7
*19b	1	40053	PRT_SCR_10004	SCREW M4*10S DIN84	6.7
22	6	40217	PRT_SCR_10008	SCREW SELFTAP 2.9mm*9.5 DIN7971	0.1.1-0.1.6
23	4	44453	PRT_SCR_10010	SCREW SELFTAP 3.5*19P DIN7971B	SPARE PARTS KIT
24	2	44510	PRT_SCR_10007	SCREW M5*16H* DIN933 A4	0.9.1, 0.9.8
25	10	44454	PRT_SCR_10009	SCREW SELFTAP 2.9*13 DIN7982 A2	0.3.1-0.3.4, 0.6.4, og
26		44431	PRT_MEK_10005	PANEL MOUNT KIT	
27	2	40273	PRT_NUT_10001	NUT M3 DIN934	22.1, 23.1
*27b	1	40273	PRT_NUT_10001	NUT M3 DIN934	5.9
28	3	40275	PRT_NUT_10002	NUT M4 DIN934	6.1, 9.1, 21.1
**29	1	44450	PRT_WSH_10001	WASHER PLAIN M3 DIN433	5.3
30	29	43577	PRT_WSH_10002	WASHER CRINKLE M3 DIN6798	1.2, 1.6, 2.2, 2.6, 3.2, 3.6, 4.2, 4.6, 5.6, 10.2, 11.2, 12.2, 13.2, 14.2, 14.4,15.2, 15.4, 16.2, 16.4, 17.2, 17.4, 22.2, 23.2, 0.1.7, 0.1.8, 0.1.9, 0.1.10, 0.1.11, 0.1.12
*30b	1	43577	PRT_WSH_10002	WASHER CRINKLE M3 DIN6798	5.8
**30c	1	43577	PRT_WSH_10002	WASHER CRINKLE M3 DIN6798	5.2
31	3	44460	PRT_WSH_10003	WASHER CRINKLE M4 DIN6798	6.2, 9.2, 21.2
32	2	44459	PRT_WSH_10004	WASHER WAVE M5	0.9.2, 0.9.7
33	4	417554	PRT_SPC_10002	SPACER 3*25mm	1.4, 2.4, 3.4, 4.4
34	4	417553	PRT_SPC_10001	SPACER, ENLIS, 2 L=8mm	1.3, 2.3, 3.3, 4.3
35	4	417555	PRT_SPC_10003	SPACER M3*25 ENHET2*25	14.3, 15.3, 16.3, 17.3
36	3	417556	PRT_SPC_10004	SPACER M3*50 ENHET2*50	1.5, 2.5, 3.5
*36b	1	417556	PRT_SPC_10004	SPACER M3*50 ENHET2*50	4.5
37	1	417549	PRT_MEK_10012	BLINDING PG11, MAKROLON	SPARE PARTS KIT
38	2	417552	PRT_MEK_10013	BLINDING PG9, MAKROLON	SPARE PARTS KIT
39	1	417548	PRT_MEK_10021	NUT PG11, BRASS	18.1

PARTS LIST for CABINET (continued)

Pos No	Qty	Old Prt. No.	ORDER Part No.	DESCRIPTION	APPLICATION (Drawing Ref)
40	2	417551	PRT_MEK_10018	NUT PG9, BRASS	19.1, 20.1
41	1	417547	PRT_MEK_10011	NIPPLE PG11, MAKROLON	18.2
42	2	417550	PRY_MEK_10010	NIPPLE PG9, MAKROLON	19.2, 20.2
43	1	151150	PRT_FL*_10001	LINE FILTER F11.037	L1/9.4
**44	1	417539	PRT_F**_10002	FUSE 0.1A SLOW 5*20mm	8.2
*44B	1	417539	PRT_F**_10004	FUSE 1A SLOW 5*20mm	8.2
44C	2	417539	PRT_F**_10002	FUSE 0.1A SLOW 5*20mm	SPARE PARTS KIT
45	2	417540	PRT_F**_10003	FUSE 0.2A SLOW 5*20mm	SPARE PARTS KIT
46	2	417541	PRT_F**_10004	FUSE 1A SLOW 5*20mm	SPARE PARTS KIT
47	2		PRT_F**_10005	FUSE 1/16 A PICOFUSE	SPARE PARTS KIT
48	1	150000	PRT_MEK_10019	FUSE SOCKET 031.1081	8.1
49	1	417557	PRT_MEK_10014	SHRINK CONNECTOR - RED	P1
50	4	417558	PRT_MEK_10015	SOLDER TAG 03411.311.011	9.3, 21.3-21.5
51	2	LS4256	PRT_W**_10001	PROGRAMMING WIRE 0.5mm2 GREEN	SPARE PARTS KIT
52	1	417546	PRT_W**_10002	MAINS CABLE 2*0.75mm2 + GROUND 2 m LONG	7.3
53	1	417544	PRT_MEK_10025	GROMMET 134-001/HENACO	7.2
54	1	417545	PRT_MEK_10026	CLAMPING for Item 53 684-054/HENACO	7.1
**55	1	417536	PRT_MEK_10020	MICA INSULATOR for TO-220	5.5
**56	1	417535	PRT_WSH_10005	NYLON SHOULDER WASHER for TO-220	5.4
**57	1	417537	PRT_T**_10001	TRANSFORMER for LR40	T1/6.3-6.6
58	1	21303	PRT_MEK_10028	BAND-HOLDERS - 15cm	For WRAPPING the MAINS CABLE
59	1	417562	PRT_LAB_10001	LABEL: "GROUND" 10mm	
60	1	417560	PRT_LAB_10002	LABEL: SERIAL NUMBER for LR40	
61	1	417561	PRT_LAB_10003	LABEL: "FUSES" for LR40	
62	1		PRT_LAB_10004	LABEL: "For Serial Signals and Remote Control"	
63	1	417566	PRT_PCK_10003	PLASTIC BAG 10*15cm	
64	1	417565	PRT_PCK_10004	PLASTIC BAG 23*32cm	
65	4		PRT_MEK_10003	SHUNT AMP 1422 70-03	SPARE PARTS KIT

7.1.2. PARTS LIST for L40/LR60 DISPLAY PCB -- V1.3

Pos No.	Qty	Old Prt. No.	ORDER Part No.	Description	Application (Drawing Ref)
1.	1	SR4156	PRT_PCB_10001	Display PCB.	
2.	7	140060	PRT_R**_10001	RESISTOR 0.5W 1% 10R	R110-116
3.	5	141140	PRT_R**_10002	RESISTOR 0.5W 1% 100R	R100-104
4.	5	141205	PRT_R**_10005	RESISTOR 0.5W 1% 680R	R105-109
5.	5	141105	PRT_R**_10012	RESISTOR 0.5W 1% 33R	R117- 121
6.	2	133070	PRT_C**_10006	CAPACITOR TANTAL: 35V 1µF M1	C100-101
7.	2		PRT_C**_10011	CAPASITOR TANTAL: 16V10uF M1	C102-103
8.	5		PRT_Q**_10002	TRANSISTOR BC636	Q100-104
9.	2	122002	PRT_CR*_10001	DIODE 1N4002	D100-101
10.	2	111374	PRT_U**_10027	IC 74LS374N	IC100-101,
11.	1	417500	PRT_U**_10018	IC ULN2003A	IC102
12.	30	405867	PRT_LED_10003	DIODE LED RED HLMP-3300 / HP	LED104-133,
13.	3	417514	PRT_LED_10001	DIODE LED 7-SEG NAR105B	LED100-102
14.	1	417515	PRT_LED_10002	DIODE LED 7-SEG NAR161B	LED103

7.1.3. PARTS LIST for LR40/LR60 COMPUTER PCB -- V1.3

Pos No	Qty	Old Prt. No.	ORDER Part No.	Description	Application (Drawing Ref)
1.	1	SR4157	PRT_PCB_10002	COMPUTER PCB	
2.	2	141170	PRT_R**_10003	RESISTOR 0.5W 1% 240R	R214-215
3.	7	141220	PRT_R**_10006	RESISTOR 0.5W 1% 1KO	R205-206, 208-212,R216
4.	1	141330	PRT_R**_10010	RESISTOR 0.5W 1% 22K	R213
5.	1	145745	PRT_R**_10014	RESISTOR SIL 9-PIN, 8X10K 2%	R201
6.	2	417518	PRT_R**_10013	RESISTOR SIL 9-PIN, 8X1K	R200, 207
7.	2	332100	PRT_C**_10001	CAPACITOR CERAMIC: 100V 2% 15pF M1	C202-203
8.	14		PRT_C**_10009	CAPACITOR : 100V 10% 100nF M2	206, 208, 210, 211, 212, 217, 218, 219, 220, 221, 222, 223, 224, 225
9.	2	133070	PRT_C**_10006	CAPACITOR TANTAL: 35V 1µF M1	C201, 207
10.	1		PRT_C**_10010	CAPACITOR TANTAL: 35V 10% 2,2uF M1	C205
11.	6		PRT_C**_10011	CAPACITOR TANTAL; 35V 10uF M1	C200, 209, 213-216
12.	1		PRT_U**_10035	IC74LS12N	IC201
13.	1	111014	PRT_U**_10021	IC 74LS14N	IC209
14.	1	111027	PRT_U**_10022	IC 74LS27N	IC202
15.	1	111374	PRT_U**_10027	IC 74LS374N	IC207
16.	1	111254	PRT_U**_10028	IC 74LS541N	IC200
17.	1	417502	PRT_U**_10026	IC 74ALS138N	IC205
18.	1	115015	PRT_U**_10042	IC E-PROM TMN2764(A)-G	IC206
19.	1	417501	PRT_U**_10003	IC MICROPROCESSOR 63A03RP	IC203
20.	1	417504	PRT_U**_10011	IC µA9638CP	IC208
21.	1	417503	PRT_U**_10014	IC TL7705A	IC204
22.	1		PRT_U**_10036	IC 74HC4053	IC210
23.	1		PRT_U**_10037	IC 74HC4040	IC211
24.	1		PRT_U**_10012	IC MAX 232	IC212
25.	1	405867	PRT_LED_10003	DIODE LED RED HLMP-3300 / HP	LED 200
26.	1	116006	PRT_OC*_10002	OPTO-COUPLER 6N138	OC200
27.	1	417509	PRT_Y**_10001	XTAL 4.915200MHz HC-16/U	Y200,
28.	1	417505	PRT_X**_10001	IC SOCKET 28-PIN DIL	IC206
29.	1	417506	PRT_J**_10001	TERMINAL STRIPS, 4-PIN TSW-104-15-L-S	TH200
30.	1		PRT_J**_10002	TERMINAL STRIPS. TSW-102-08-L-D-RA	RS232, RS422
31.			PRT_J**_10003	TERMINAL STRIPS TSW-104-08-L-D-RA	BAUD RATE
32.	1		PRT_TP*_10001	TEST POINT	TP1
33.	2	417534	PRT_W**_10004	FLEXISTRIP FSN-21A-25 / T&B	J100, 200
34.	1	417524	PRT_S**_10002	DIL SWITCH 16P 8-POL BP08-R-K- or BD08AV2 C&K	SW200
35.	1	417559	PRT_LAB_10001	LABEL for E-PROM LR40	VERSION: Vx.x
36.	5		PRT_R**_10001	SHUNT RESISTOR JL-400-25-T	LINK 1-5
37.	3		PRT_SHT_10002	SHUNT AMP 1422-70-03	HEADERS BAUD RATE, RS422

7.1.4. PARTS LIST for LR40 INTERFACE PCB -- V1.2

PARTS MARKED with * = NOT MOUNTED in -AC version
PARTS MARKED with ** = NOT MOUNTED in -DC version

Pos No.	Qty	Old Prt. No.	ORDER Part No.	Description	Application (Drawing Ref.)
1	1	SR4158	PRT_PCB_10003	INTERFACE.PCB	
2	3	141240	PRT_R**_10008	RESISTOR 0.5W 1% 2K2	R312-314
3	3	417516	PRT_R**_10004	RESISTOR 1W 5% 510R	R300, 302, 304
4	7	417517	PRT_R**_10007	RESISTOR 2W 5% 1K5	R 301. 303, 305, 306-309
5	3	417573	PRT_R**_10009	RESISTOR 0.5W 1% 10K	R315-317
6	1	145745	PRT_R**_10014	RESISTOR SIL 9-PIN, 8x10K 2%	R 311
7	1	145755	PRT_R**_10016	RESISTOR SIL 9-PIN, 8x1M 2%	R310
8	2		PRT_R**_10015	RESISTOR SIL 8-PIN, 4x 33K 2%	R318-319
9	8	130040	PRT_C**_10007	CAPACITOR CERAMIC 100V 10% 2.2nF M1	C305-312
10	1		PRT_C**_10009	CAPACITOR CERAMIC 100V 10% 100nF M2	C316
**11	1	417521	PRT_C**_10002	CAPACITOR E1.LYT, 16V ± 20% 4700µF	C313, fastened w/ SILIKON PASTE
12	2	133070	PRT_C**_10006	CAPACITOR TANTAL 35V 1µF M1	C314-315
13	2	417513	PRT_CR*_10005	DIODE ZENER: 1.3W 33V IN4752A	D312-313
14	7	417511	PRT_CR*_10003	DIODE ZENER: 1.3W 4.3V IN4731A /RD33FB	D301, 302, 305, 309,323-325
15	8	417512	PRT_CR*_10004	DIODE ZENER: 1 W 24V1N4749A	D300, 304, 308, 318-322
16	2	126000	PRT_CR*_10002	DIODE RECTIFIER: CBR1/080	D314, D315
*16b	1	126000	PRT_CR*_10002	DIODE RECTIFIER: CBR1/080 Central Semi Conductor	D316
*17	1		PRT_CR*_10006	VARISTOR SIOV-S10K40	D317
18	1	111254	PRT_U**_10028	IC 74LS541N	IC300
**19	1	114010	PRT_U**_10015	IC VOLTAGE REG. +5V MC7805CT	IC301
20	11	116027	PRT_OC*_10001	OPTO-COUPLER 4N33/PS2022	OC300-310
21	1		PRT_P**_10001	CONNECTOR IDL-C26-1-7	J305
22	9	417569	PRT_SHT_10001	SHUNT, AMP-1422-70-03	LK300B, 300D, 301B, 301D, 302B, 302D, 303B, 303D, 310(2-3)
23	1		PRT_SHT_10002	SHUNT MNT-103-BK-G	LK SYNC/STEP
24	1		PRT_J**_10001	TERMINAL STRIP, TSW-104-15-L-S	J310
25	3		PRT_J**_10006	TERMINAL STRIP, TSW-104-08-L-D-RA	J300, 301, 302
26	3		PRT_J**_10007	TERMINAL STRIP, TSW-103-08-L-D-RA	SYNC, STEP, J303
27	2		PRT_J**_10008	TERMINAL STRIP, TSW-102-08-L-S-RA	J306, 307
28	1	SR4184	PRT_W**_10003	CABLE, RIBBON, 26 LEADS L=20cm 55-26-28 LOG	J305
29	1		PRT_CON_10001	CONNECTOR IDS-C26PK-TG	P401
30	1	417531	PRT_TB*_10005	SCREW TERMINAL 6-POL 951DS	J309
*31	1		PRT_U**_10040	DC/DC CONVERTER 505S24UFR	IC303
*32	0		PRT_U**_10041	DC/DC CONVERTER SI5W1-41 (ALTERNATIVE SUPPLY)	IC304
33	2		PRT_TP*_10001	TESTPOINT	TP1-2
34	4		PRT_J**_10009	SOLDER CONTACT 450-3704-01-03	FOR IC304 ITEM 32
35	5		PRT_J**_10010	SOLDER TAG H2072-Z01	FOR IC U303 WHEN 24V DC MAINS

7.1.5. PARTS LIST for LR40 CONNECTOR PCB -- V1.0

Pos No.	Qty	Old Prt. No.	ORDER Part No.	Description	Application (Drawing Ref.)
1	1	SR4160	PRT_PCB_10004	CONNECTOR PCB	
2	1		PRT_TB*_10001	SCREW TERMINAL 8-pol. TYPE: MKDSN1.5/8-5.08	J400
3	1		PRT_TB*_10002	SCREW TERMINAL 10-pol TYPE: MKDSN 1.5/10-5.08	J402
4	1		PRT_J**_10004	CONNECTOR HEADER TYPE: IDH26PK2-S3TR	J401
5	9		PRT_C**_10008	CAPASITOR MP-type 0.1uF 250V 261KA5100K	C400- 408
6	6	122002	PRT_CR*_10001	DIODE 100Vtype 1N4002	D400- 405
7	2		PRT_F**_10005	PICOFUSE 62.5 mA 125Vtype MCR-1/16A	F400- 401
8	5	128004	PRT_L**_10001	INDUCTOR 1mH type B78108-S1105	L400- 404
9	1		PRT_J**_10005	TERMINAL STRIP 3-pol TSW-103-15-L-S	LK400
10	1	417569	PRT_SHT_10001	SHUNT MJ-60-B	LK400

7.2. SCHEMATIC DIAGRAMS.

7.2.1. DRAWING No.: SR4193

SCHEMATIC DIAGRAM for CONNECTOR & MAINS DISTRIBUTION

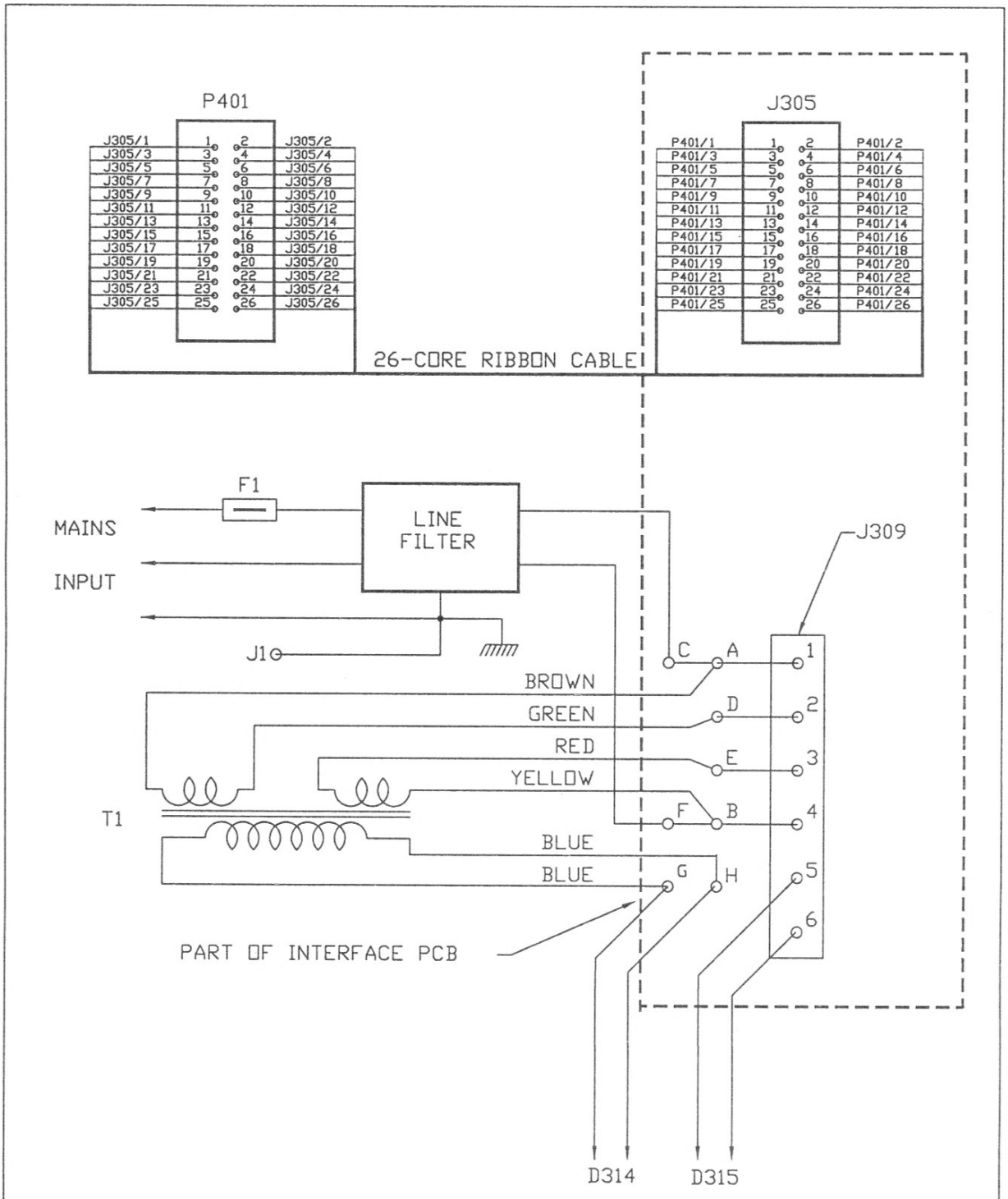

THIS DRAWING, AND THE IDEAS AND THE DESIGN INCORPORATED HEREIN, IS THE PROPERTY OF SCANDINAVIAN MICRO SYSTEMS A/S, AND IS NOT TO BE USED IN WHOLE OR IN PART FOR ANY OTHER PROJECT OR SHOWN TO A THIRD PARTY WITHOUT OUR WRITTEN AUTHORIZATION	SCANDINAVIAN MICRO SYSTEMS A/S P.O.BOX 155, N-1411 KOLBOTN, NORWAY
CUSTOMER / PROJECT ScanDisplay	TITLE LR40 (NV) GYRO REPEATER SCHEMATIC DIAGRAM FOR CONNECTOR AND MAINS DISTRIBUTION
DRWN BY AO DATE 250594 / SCALE ==(A4/0)	REF DRAWING / DRAWING NO. SR4193
Rev. No. 1/TG DATE 300896 / APPRVD BY DATE	FILE NAME \SR\SYSDRAW\SR4193.DWG

7.2.2. DRAWING No.: SR4192

INTERCONNECTION of REMOTE CONTROL to DIGITAL GYRO REPEATER LR40

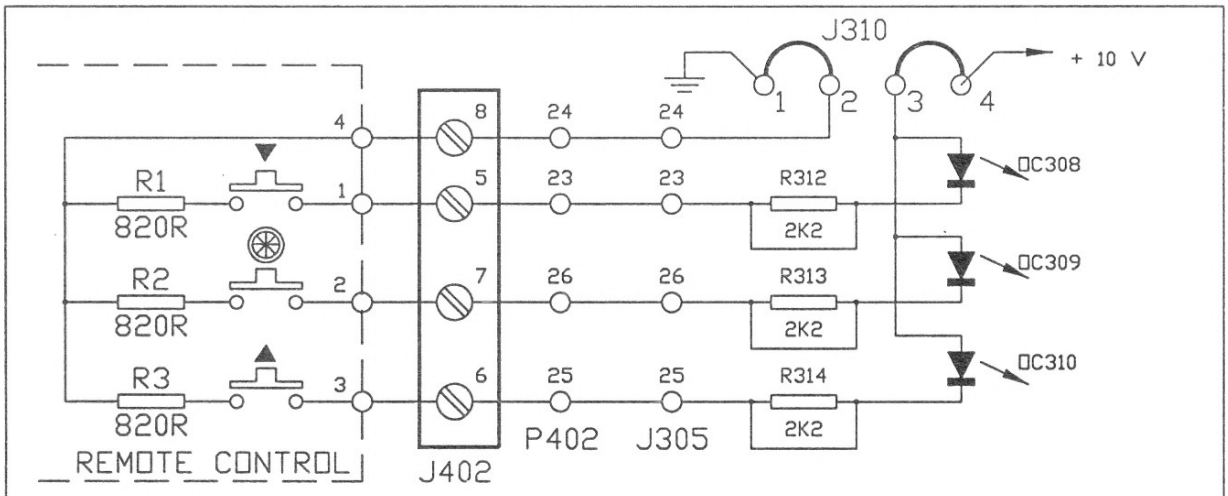

REMOTE CONTROL WITH INTERNAL SUPPLY.

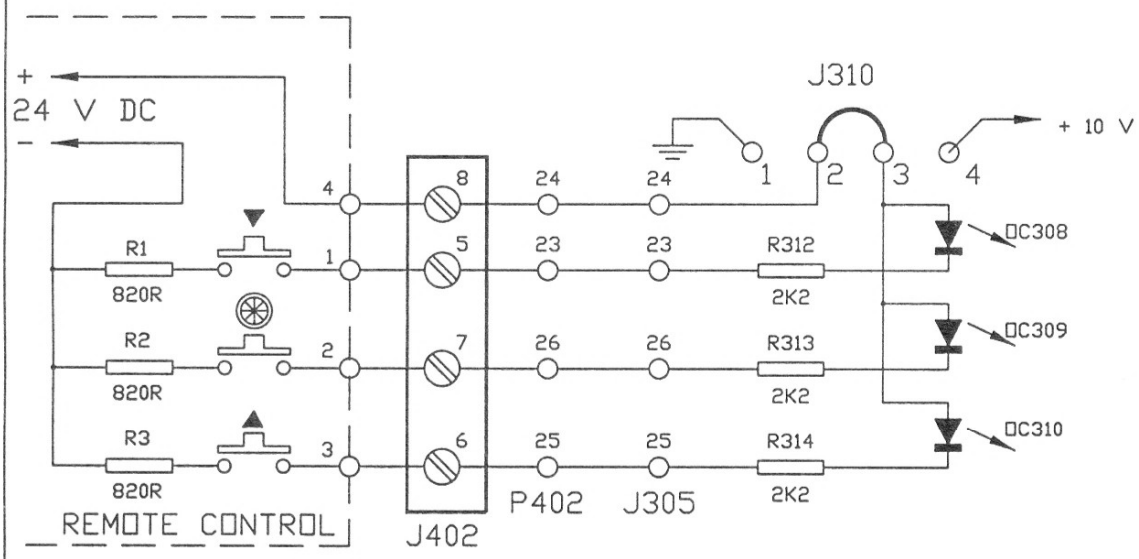

REMOTE CONTROL WITH EXTERNAL 24 V DC SUPPLY.

THIS DRAWING, AND THE IDEAS AND THE DESIGN INCORPORATED HEREIN, IS THE PROPERTY OF SCANDINAVIAN MICRO SYSTEMS A/S, AND IS NOT TO BE USED IN WHOLE OR IN PART FOR ANY OTHER PROJECT OR SHOWN TO A THIRD PARTY WITHOUT OUR WRITTEN AUTHORIZATION	SCANDINAVIAN MICRO SYSTEMS A/S P.O.BOX 155, N-1411 KOLBOTN, NORWAY
CUSTOMER / PROJECT ScanRepeater	TITLE INTERCONNECTION OF REMOTE CONTROL TO DIGITAL GYRO REPEATER LR40
DRWN BY AO DATE 260494 / SCALE ==(A4/0) / REF DRAWING / DRAWING NO. SR4192	
Rev. No. 01/OS DATE 11.05.95 / APPRVD BY DATE / FILE NAME \SR\SYSDRAW\SR4192.DWG	

7.2.3. DRAWING No.: SR4194

COMPONENT LOCATION & SCHEMATIC DIAGRAM for LR40 CONNECTOR PCB

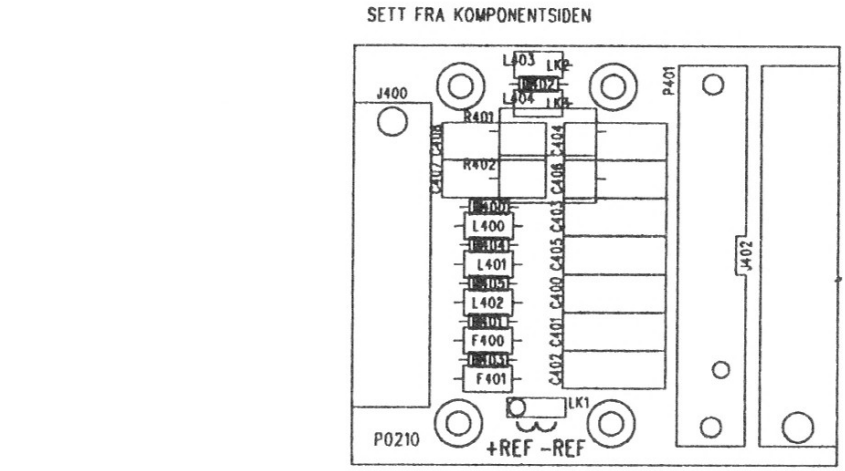

P0210

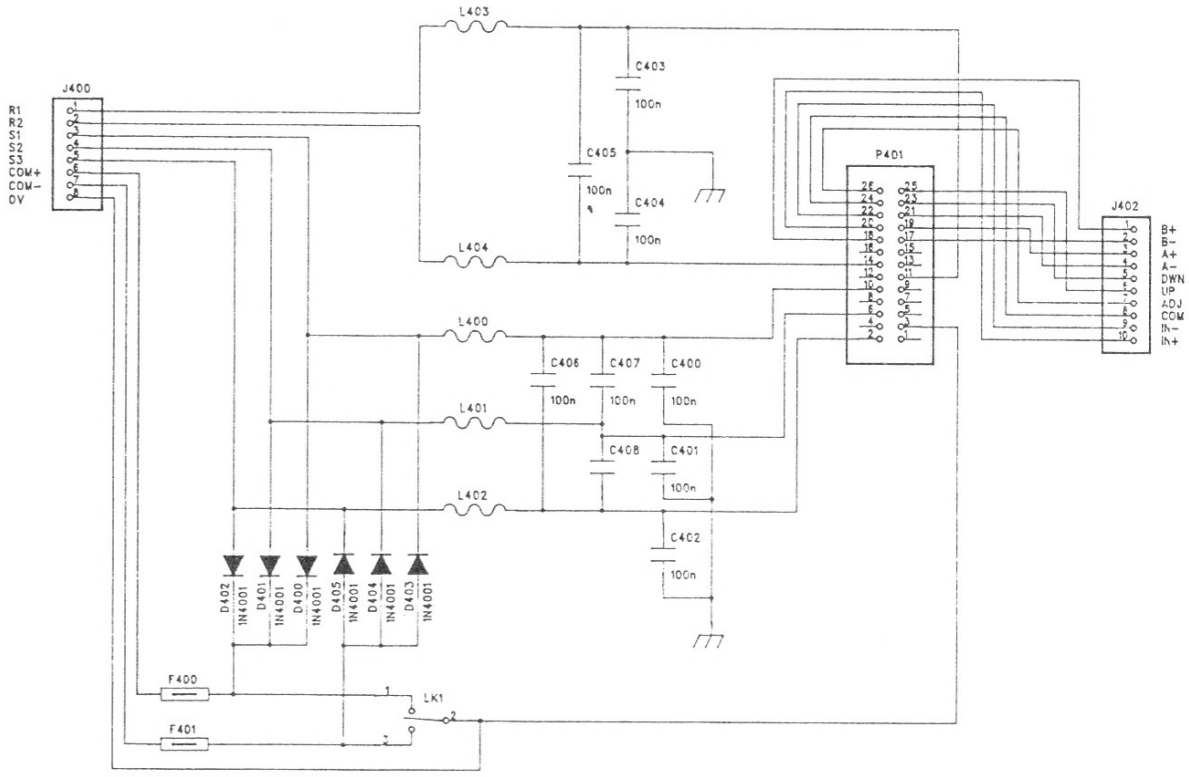

THIS DRAWING, AND THE IDEAS AND THE DESIGN INCORPORATED HEREIN, IS THE PROPERTY OF SCANDINAVIAN MICRO SYSTEMS A/S, AND IS NOT TO BE USED IN WHOLE OR IN PART FOR ANY OTHER PROJECT OR SHOWN TO A THIRD PARTY WITHOUT OUR WRITTEN AUTHORIZATION	SCANDINAVIAN MICRO SYSTEMS A/S P.O.BOX 155, N-1411 KOLBOTN, NORWAY
CUSTOMER / PROJECT ScanRepeater	TITLE LR40 (NV) GYRO REPEATER COMPONENT LOCATION AND SCHEMATIC DIAGRAM FOR CONNECTOR PCB.
DRWN BY AO DATE 300594 / SCALE ==(A4/0)	REF DRAWING / DRAWING NO. SR4194
Rev. No. DATE / APPRVD BY DATE	FILE NAME \SR\PCB\CONNECTOR\LR40\SR4194

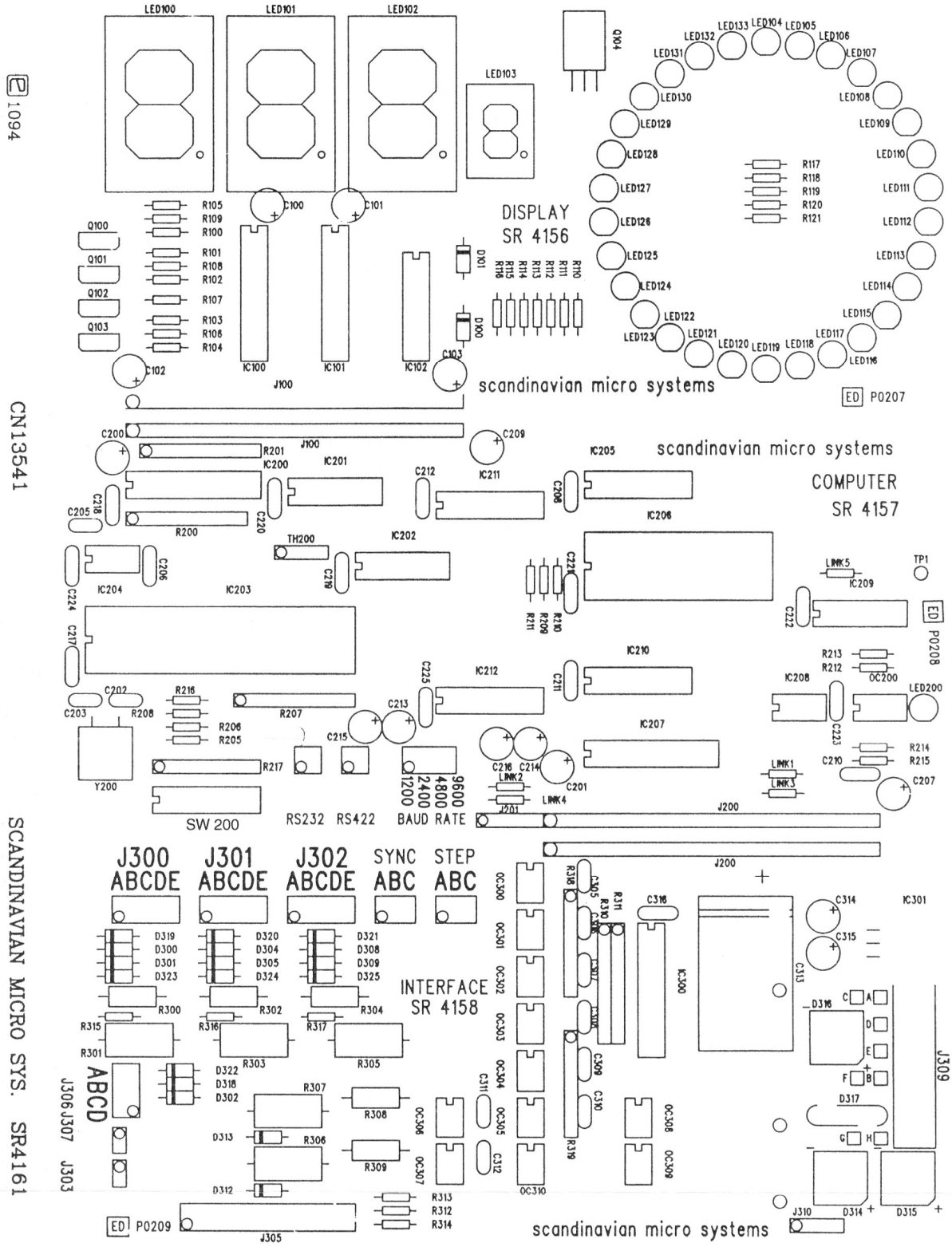

THIS DRAWING, AND THE IDEAS AND THE DESIGN INCORPORATED HEREIN, IS THE PROPERTY OF SCANDINAVIAN MICRO SYSTEMS A/S, AND IS NOT TO BE USED IN WHOLE OR IN PART FOR ANY OTHER PROJECT OR SHOWN TO A THIRD PARTY WITHOUT OUR WRITTEN AUTHORIZATION	SCANDINAVIAN MICRO SYSTEMS A/S P.O.BOX 155, N-1411 KOLBOTN, NORWAY
CUSTOMER / PROJECT ScanRepeater	TITLE LR40 (NV) GYRO REPEATER COMPONENT LOCATION FOR PCB´S DISPLAY, COMPUTOR & INTERFASE
DRWN BY AO DATE 080494 / SCALE ==(A3/90 / REF DRAWING	DRAWING NO. SR3207
Rev. No. / DATE / APPRVD BY / DATE / FILE NAME \SR\SYSDRAW\SR3207.DWG	

THIS PAGE INTENTIONALLY LEFT BLANK.

7.2.5. DRAWING No.: SR4156

SCHEMATIC DIAGRAM for LR40/LR60 DISPLAY PCB

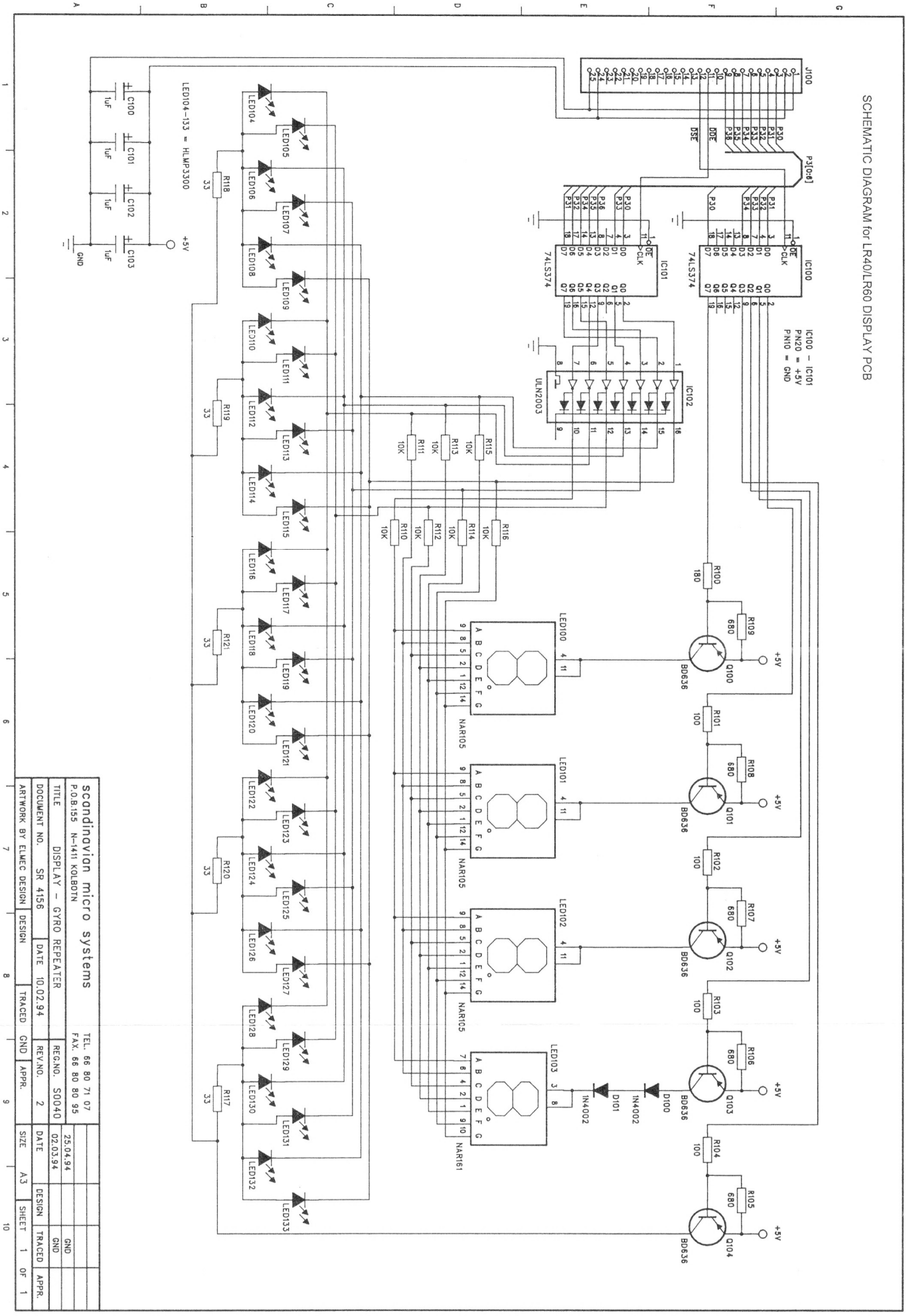

THIS PAGE INTENTIONALLY LEFT BLANK.

7.2.6. DRAWING No.: SR4157

SCHEMATIC DIAGRAM for LR40/LR60 COMPUTER PCB

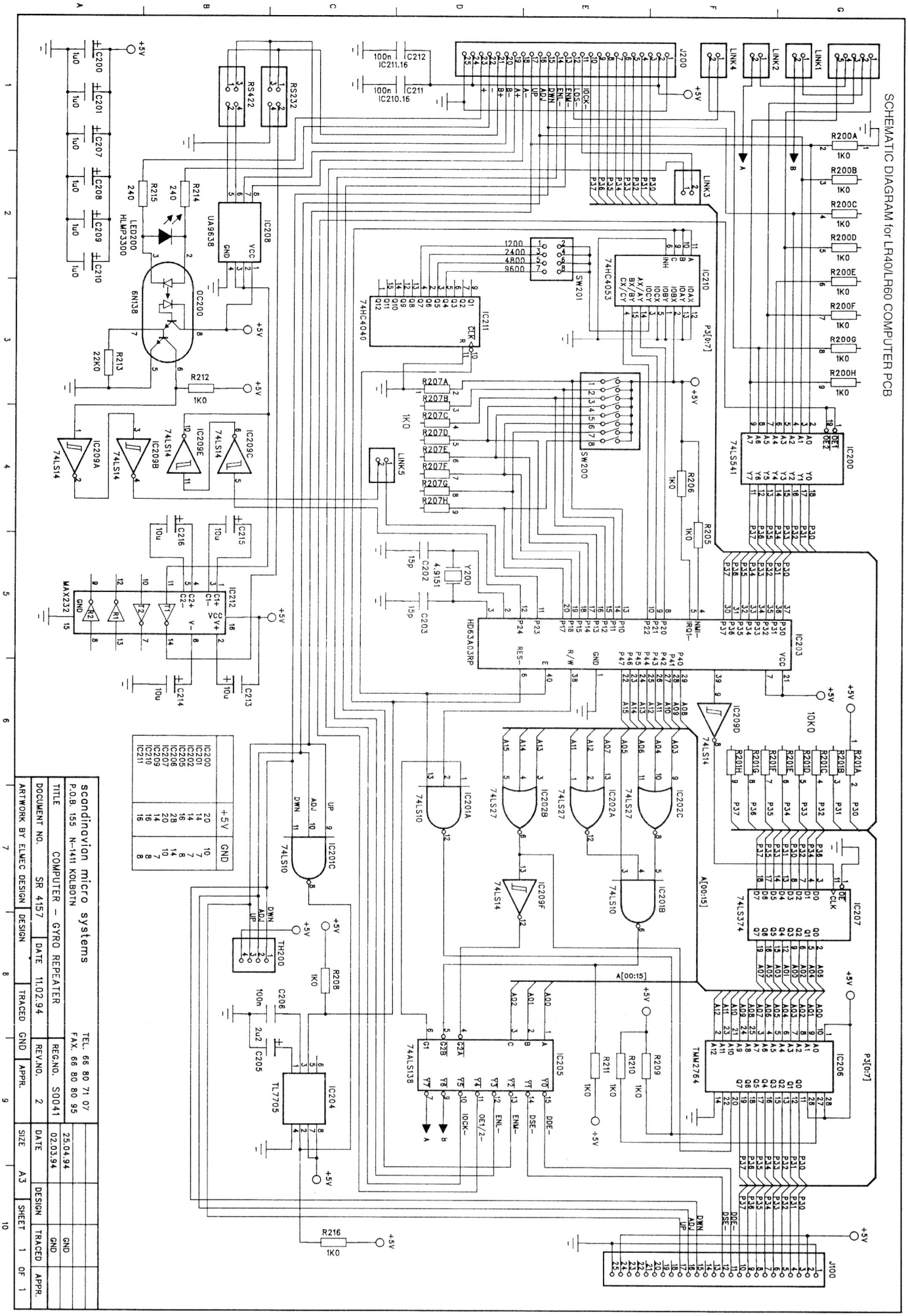

THIS PAGE INTENTIONALLY LEFT BLANK.

7.2.7. DRAWING No.: SR4158

SCHEMATIC DIAGRAM for LR40 INTERFACE PCB

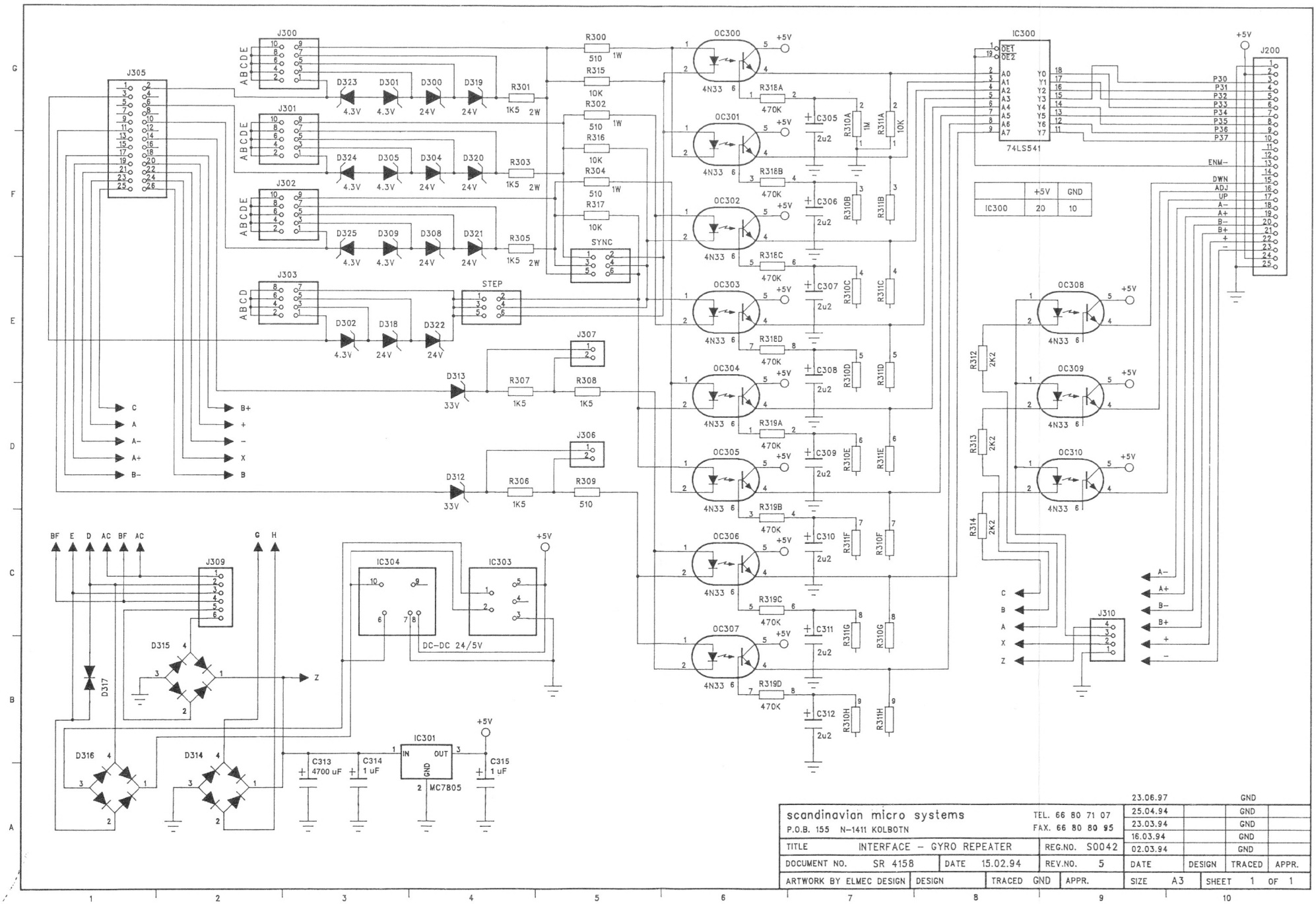

THIS PAGE INTENTIONALLY LEFT BLANK.

7.3. CERTIFICATE OF GUARANTEE

Certificate of Guarantee

This instrument is guaranteed against defective materials and workmanship, for a period of one year from the date of installation and limited to a period of 18 months after shipment of the instrument from Scandinavian Micro Systems A/S. Proof of said installation must be provided Scandinavian Micro Systems A/S by completing and returning the attached "IMPLEMENTATION of GUARANTEE CARD" immediately.

Under this guarantee Scandinavian Micro Systems A/S will either repair at its factory or replace this instrument or parts thereof which become defective in proper use and normal wear and tear, provided the defective instrument or part is returned, carriage prepaid to Scandinavian Micro Systems A/S, Kolbotn Norway. On board labor and traveling expenses are not covered under this guarantee.

All requests for repair and replacement parts, printed circuit boards or units should be directed to the local representative for Scandinavian Micro Systems A/S or directly to our address in Norway. Please include type designation and serial number in all correspondence concerning this instrument.

As far as possible, all guarantee service will be limited to exchanging printed circuit boards or units. All replacement parts, printed circuit board and units will be charged to the customer and refunded to him upon receipt of carriage prepaid said defective parts, printed circuit board and units.

Scandinavian Micro Systems A/S shall not in any way be liable for any consequential loss or damage occurring to any person, vessel, structure or building in which this instrument is permanently or temporarily located, nor to any person acting in connection with the instrument.

IMPLEMENTATION of GUARANTEE CARD

(Ship's Copy)

Digital Gyro Repeater

TYPE:		INSTALLED BY:	
SERIAL No.:		MASTER'S SIGN:	
MAINS:		DATE:	

GYRO TYPE & MAKE:	
NAME of VESSEL:	
NAME of OWNER:	
NB No.:	
YARD:	
NAME of AGENT:	

Scandinavian Micro Systems A/S
P.O. Box 155, 1411 KOLBOTN , NORWAY. Tel..(+47) 6680.7107 FAX: (+47) 6680.8095

IMPLEMENTATION of GUARANTEE CARD

(Distributor's Copy)

Digital Gyro Repeater

TYPE:		INSTALLED BY:	
SERIAL No.:		MASTER'S SIGN:	
MAINS:		DATE:	

GYRO TYPE & MAKE:	
NAME of VESSEL:	
NAME of OWNER:	
NB No.:	
YARD:	
NAME of AGENT:	

Scandinavian Micro Systems A/S
P.O. Box 155, 1411 KOLBOTN , NORWAY. Tel..(+47) 6680.7107 FAX: (+47) 6680.8095

IMPLEMENTATION of GUARANTEE CARD

(Mail or Fax this copy to Scandinavian Micro Systems)

Digital Gyro Repeater

TYPE:		INSTALLED BY:	
SERIAL No.:		MASTER'S SIGN:	
MAINS:		DATE:	

GYRO TYPE & MAKE:	
NAME of VESSEL:	
NAME of OWNER:	
NB No.:	
YARD:	
NAME of AGENT:	

Scandinavian Micro Systems A/S
P.O. Box 155, 1411 KOLBOTN , NORWAY. Tel..(+47) 6680.7107 FAX: (+47) 6680.8095

stamp

.....

.....

.....

.....

.....

---

stamp

Scandinavian Micro Systems A/S
P.O. Box 155
1411 KOLBOTN
NORWAY.

8.97. 1.000 (10137) Kolbotn Trykkeri As 66 80 05 05